YAMAHA

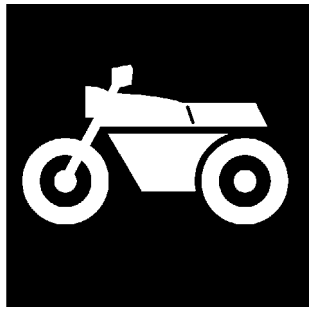

PARTS CATALOGUE

YZFR1LEZ (14BL) U49
YZFR1LEZC (14BM) CALIFORNIA

1J14B-110EA

( )

YAMAHA
GENUINE
Parts & Accessories

YZFR1LEZ/YZFR1LEZC
PARTS CATALOGUE
©2009 by Yamaha Motor Co., Ltd.
1st edition, December 2009
All rights reserved.
Any reprinting or unauthorized use
without the written permission of
Yamaha Motor Co., Ltd.
is expressly prohibited.
Printed in Japan.

FOREWORD

This Parts Catalogue is related to the parts for the model(s) on the cover page. When you are ordering replacement parts, please refer to this Parts Catalogue and quote both part numbers and part names correctly.

1. Modifications or additions which have been made after the issue of the Parts Catalogue will be announced in the Parts News.
   It is advisable that you make the necessary corrections to the Parts Catalogue according to the Parts News.

2. Abbreviations
   The following abbreviations are used in this Parts Catalogue.

   “UR” Use specified parts number.
   “UN” Use as many as needed.
   “AP” Alternate Parts
   “LM” Locally Made (Parts need to be ordered locally)
   “F#” Frame No. (Applicable machine No.)
   “O/S” Over Size

3. The number of components for assembly
   - Parts, which are to be supplied in an assembly, are listed with a dot (.) in front of the part name as shown below.
   - The numeral appearing to the right of each component part indicates the quantity of parts for each assembly unit.

PART NO.	DESCRIPTION	Q’TY	REMARKS
2F5–83310–60	FRONT FLASHER LIGHT ASSY	2	
115–83311–60	.BULB (6V–18W)	1	

4. Applicable colours of graphics are represented in the “REMARKS” as shown below.

PART NO.	DESCRIPTION	Q’TY	REMARKS
2N4–24110–00–X5	FUEL TANK COMP.	2	MXR
3J1–24240–10	.GRAPHIC, FUEL TANK	1	FOR MXR

5. Note that the illustrations for reference in finding parts numbers are not to be used for assembling. When assembling, please use the applicable service manual.

6. The asterisk (*) before a reference number indicates modified items after the first edition.

7. Applicable Serial No.

Engine Serial No.

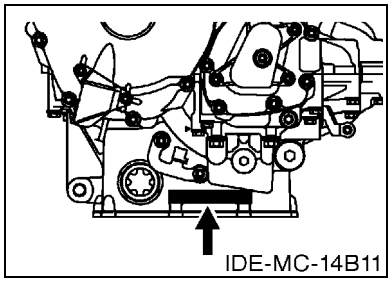

Frame Serial No.

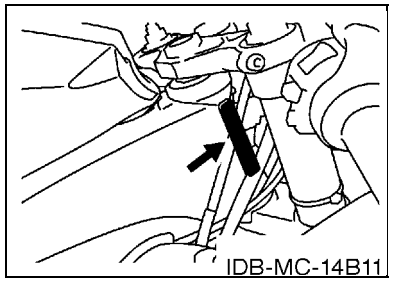

8. Applicable Colour Code (The (*) mark shows Model colour.)

Abbreviation	Colour Name	Colour Code
BWC1	BLUISH WHITE COCKTAIL 1	0390
DPBMC(*)	DEEP PURPLISH BLUE METALLIC C	0564
LGB	LOW GLOSS BLACK	0098
MBL2	MAT BLACK 2	0582

MODEL LABEL

(1) A label called “Model Label” is affixed in the location as indicated in (3) below.
When using this parts catalogue, please be sure to cross–reference the “model code – production code No.” in the catalogue with the “model code – production code No.” indicated on the Model Label affixed onto the product concerned.

(2) “Model Label” Indication

a	b
○ xxxx	– xxx
● x c	

a: Model Type Code
b: Production Code No.
c: Colouring Type

○ 4TW1–010
● A

(3) Model Label Affixing Location

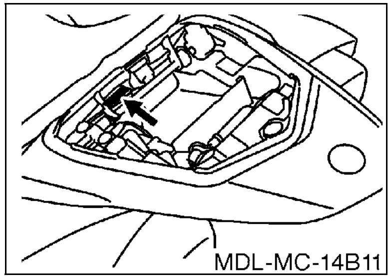

(4) Colouring Information

Model Code	Colouring Type Code	Colour Code	Colour Name	Abbrevia-tion
14BL	A	0564	DEEP PURPLISH BLUE METALLIC C	DPBMC
14BM	A	0564	DEEP PURPLISH BLUE METALLIC C	DPBMC

(5) Model Code – Production Code Number of Model Listed in This Parts Catalogue

Model Code	Production Code No.	Country (destination)	Model Code	Production Code No.	Country (destination)
14BL	010	U49			
14BM	010	CALIFORNIA			

CONTENTS

ENGINE

CYLINDER HEAD 1
CYLINDER 3
CRANKSHAFT & PISTON 4
VALVE 5
CAMSHAFT & CHAIN 7
WATER PUMP 8
RADIATOR & HOSE 10
OIL PUMP 13
OIL CLEANER 14
INTAKE 15
INTAKE 2 17
AIR INDUCTION SYSTEM 18
EXHAUST 19
CRANKCASE 22
CRANKCASE COVER 1 23
STARTER 25
CLUTCH 26
TRANSMISSION 28
SHIFT CAM & FORK 30
SHIFT SHAFT 31

CHASSIS

FRAME 33
FENDER 36
SIDE COVER 38
REAR ARM 39
REAR SUSPENSION 41
STEERING 42
FRONT FORK 44
FUEL TANK 46
SEAT 50
FRONT WHEEL 51
FRONT BRAKE CALIPER 52
REAR WHEEL 53
REAR BRAKE CALIPER 55
STEERING HANDLE & CABLE 56
FRONT MASTER CYLINDER 57
STAND & FOOTREST 59
REAR MASTER CYLINDER 62
COWLING 1 64
COWLING 2 68
GENERATOR 71
STARTING MOTOR 72
FLASHER LIGHT 73
METER 74
HEADLIGHT 75
TAILLIGHT 76
HANDLE SWITCH & LEVER 77
ELECTRICAL 1 78
ELECTRICAL 2 80

INDEX

NUMERICAL INDEX 83

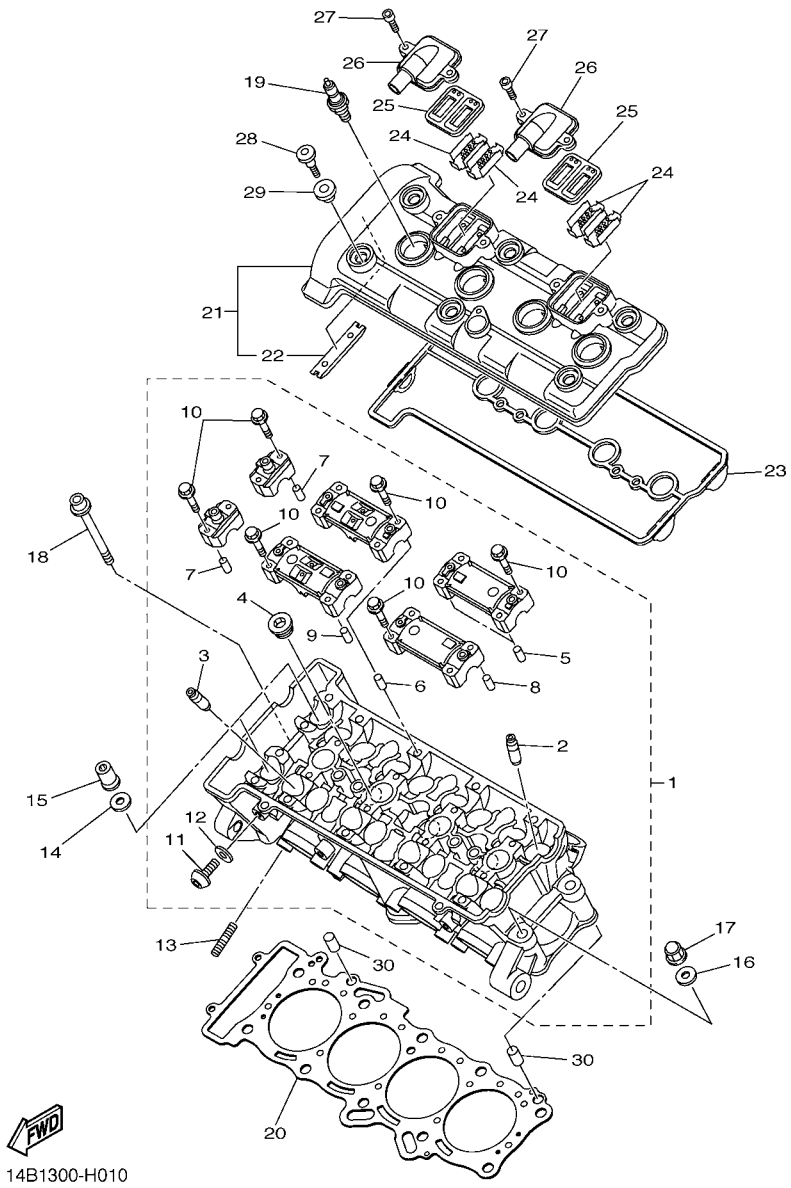

FIG. 1 CYLINDER HEAD

REF. NO.	PART NO.	DESCRIPTION	14BL	14BM				REMARKS
1	14B–11101–00	CYLINDER HEAD ASSY	1	1				
2	14B–11133–10	.GUIDE, VALVE 1	8	8				
3	4C8–11134–10	.GUIDE, VALVE 2	8	8				
4	90340–18002	.PLUG, STRAIGHT SCREW	3	3				
5	91808–16023	.PIN, DOWEL	2	2				
6	91808–16023	.PIN, DOWEL	2	2				
7	91808–16023	.PIN, DOWEL	4	4				
8	91808–16023	.PIN, DOWEL	2	2				
9	91808–16023	.PIN, DOWEL	2	2				
10	90105–06027	.BOLT, FLANGE	20	20				
11	90149–06070	.SCREW	1	1				
12	90430–06014	.GASKET	1	1				
13	95612–08625	BOLT, STUD	8	8				
14	90201–10050	WASHER, PLATE	8	8				
15	90179–10029	NUT	8	8				
16	90201–10050	WASHER, PLATE	2	2				
17	90176–10075	NUT, CROWN	2	2				
18	90110–06315	BOLT, HEXAGON SOCKET HEAD	2	2				
19	94701–00424	PLUG, SPARK (NGK LMAR9E-J)	4	4				
20	14B–11181–00	GASKET, CYLINDER HEAD 1	1	1				
21	14B–11191–00	COVER, CYLINDER HEAD 1	1	1				
22	5BE–12241–00	.GUIDE, STOPPER 2	1	1				
23	14B–11193–00	GASKET, HEAD COVER 1	1	1				
24	5VY–1482K–00	PLATE	4	4				
25	5SL–14890–10	REED VALVE ASSY	2	2				
26	14B–14899–00	CAP, CASE	2	2				
27	90110–06175	BOLT, HEXAGON SOCKET HEAD	4	4				

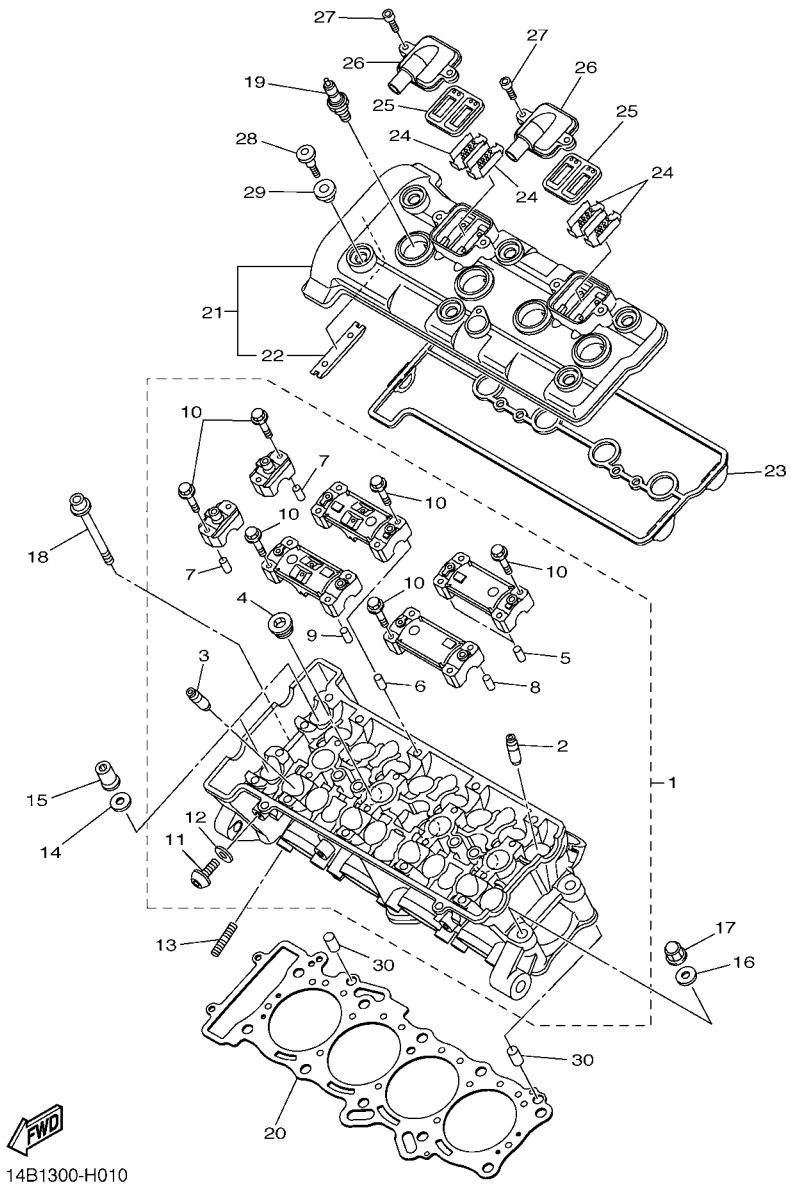

FIG. 1 CYLINDER HEAD

REF. NO.	PART NO.	DESCRIPTION	14BL	14BM				REMARKS
28	90109–066F0	BOLT	6	6				
29	5VY–1111G–00	RUBBER, MOUNT 1	6	6				
30	99530–10114	PIN, DOWEL	2	2				

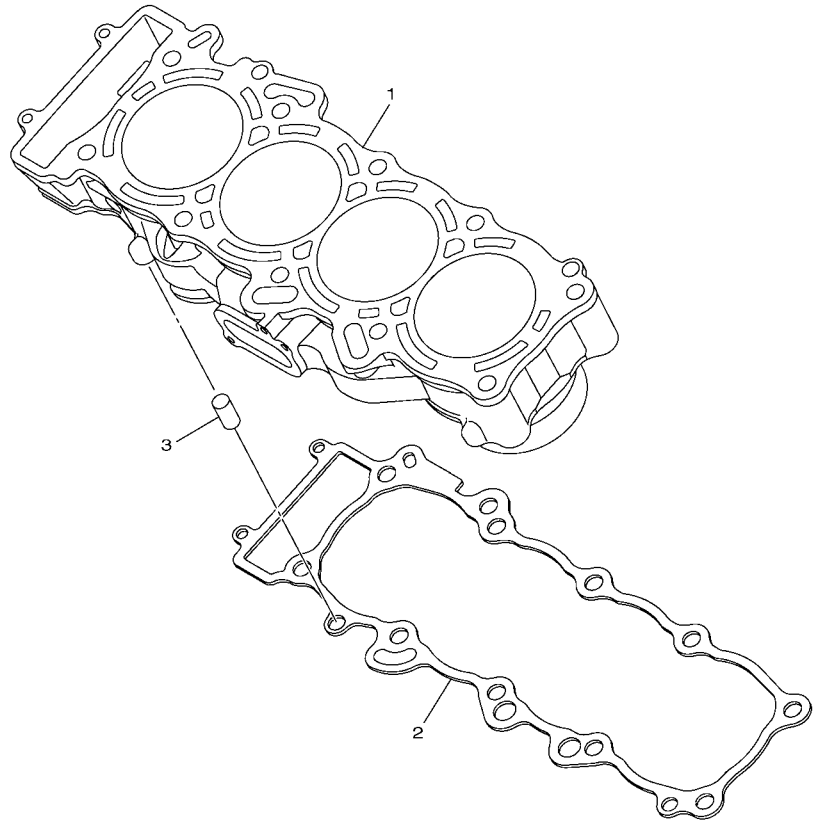

14B1300-H020

FIG. 2 CYLINDER

REF. NO.	PART NO.	DESCRIPTION	14BL	14BM				REMARKS
1	14B–11311–00	CYLINDER 1	1	1				
2	14B–11351–00	GASKET, CYLINDER	1	1				
3	99530–10114	PIN, DOWEL	2	2				

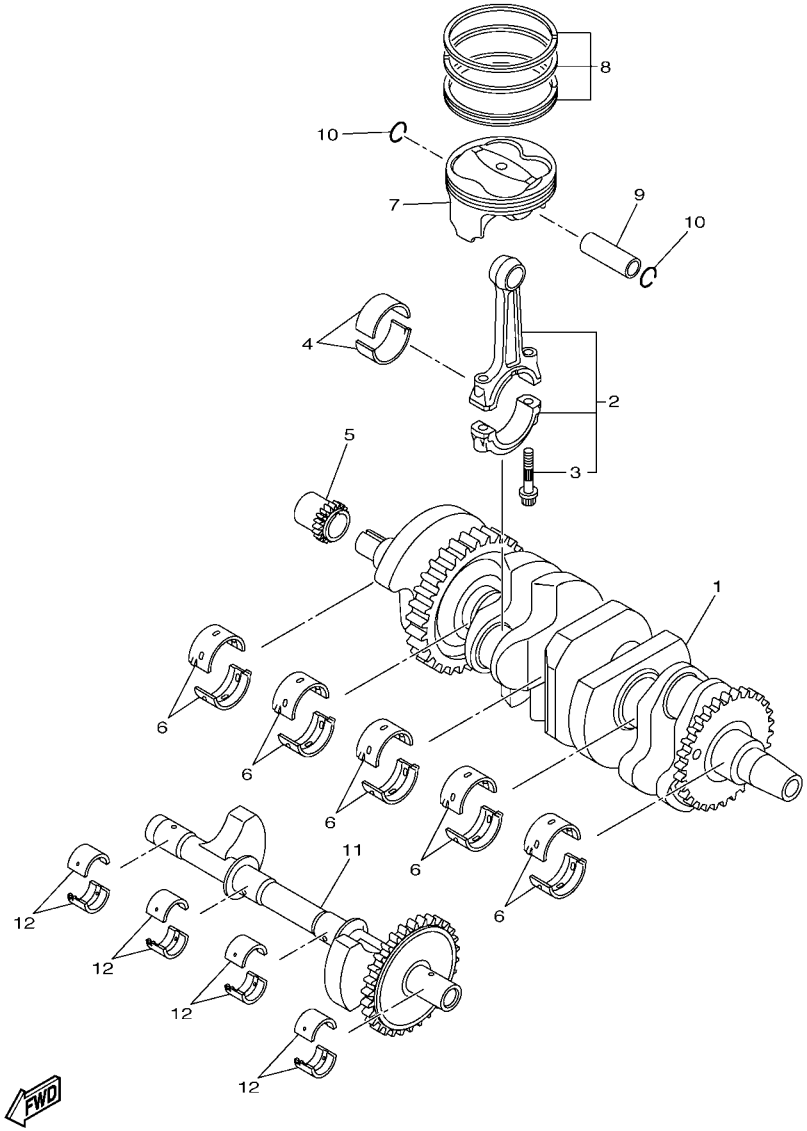

FIG. 3 CRANKSHAFT & PISTON

REF. NO.	PART NO.	DESCRIPTION	14BL	14BM				REMARKS
1	14B–11400–00	CRANKSHAFT ASSY	1	1				
2	14B–11650–00	CONNECTING ROD ASSY	4	4				
3	5VY–11654–01	.BOLT, CONNECTING ROD	2	2				
4	14B–11656–00	PLANE BEARING, CONNECTING ROD	8	8				UR PINK-BLUE
	14B–11656–10	PLANE BEARING, CONNECTING ROD	8	8				UR PINK-BLACK
	14B–11656–20	PLANE BEARING, CONNECTING ROD	8	8				UR PINK-BROWN
	14B–11656–30	PLANE BEARING, CONNECTING ROD	8	8				UR PINK-GREEN
5	14B–11549–00	SPROCKET, CAM CHAIN	1	1				
6	14B–11416–00	PLANE BEARING, CRANKSHAFT 1	10	10				UR BLUE
	14B–11416–10	PLANE BEARING, CRANKSHAFT 1	10	10				UR BLACK
	14B–11416–20	PLANE BEARING, CRANKSHAFT 1	10	10				UR BROWN
	14B–11416–30	PLANE BEARING, CRANKSHAFT 1	10	10				UR GREEN
	14B–11416–40	PLANE BEARING, CRANKSHAFT 1	10	10				UR YELLOW
7	14B–11631–00	PISTON (STD)	4	4				
8	14B–11603–00	PISTON RING SET (STD)	4	4				
9	4C8–11633–00	PIN, PISTON	4	4				
10	93450–18157	CIRCLIP	8	8				
11	14B–11500–00	BALANCER ASSY	1	1				
12	14B–11413–00	PLANE BEARING, BALANCE WEIGHT	8	8				UR BLUE
	14B–11413–10	PLANE BEARING, BALANCE WEIGHT	8	8				UR BLACK
	14B–11413–20	PLANE BEARING, BALANCE WEIGHT	8	8				UR BROWN
	14B–11413–30	PLANE BEARING, BALANCE WEIGHT	8	8				UR GREEN
	14B–11413–40	PLANE BEARING, BALANCE WEIGHT	8	8				UR YELLOW
	14B–11413–50	PLANE BEARING, BALANCE WEIGHT	8	8				UR PINK
	14B–11413–A0	PLANE BEARING, BALANCE WEIGHT	8	8				UR WHITE

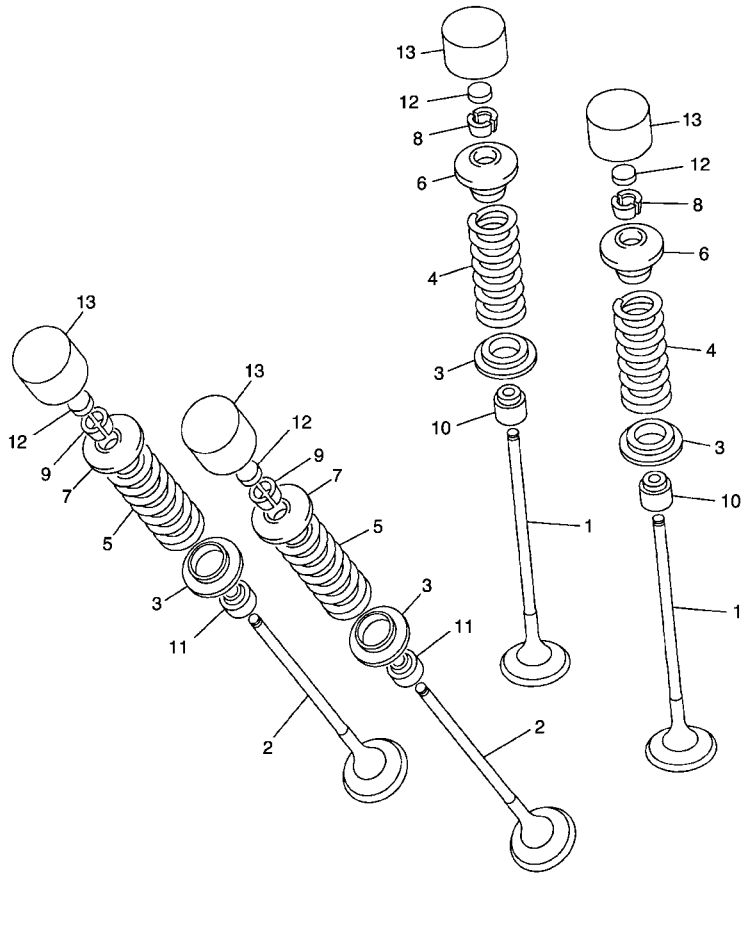

4C81300-F040

FIG. 4 VALVE

REF. NO.	PART NO.	DESCRIPTION	14BL	14BM				REMARKS
1	14B–12111–00	VALVE, INTAKE	8	8				
2	14B–12121–00	VALVE, EXHAUST	8	8				
3	4C8–12116–00	SEAT, VALVE SPRING	16	16				
4	14B–12113–00	SPRING, VALVE INNER	8	8				
5	14B–12114–00	SPRING, VALVE OUTER	8	8				
6	4C8–12117–00	RETAINER, VALVE SPRING	8	8				
7	4C8–12127–00	RETAINER, VALVE SPRING	8	8				
8	1AA–12118–00	COTTER, VALVE	16	16				
9	1WG–12118–00	COTTER, VALVE	16	16				
10	3P6–12129–00	SEAL, VALVE STEM	8	8				
11	4TE–12119–00	SEAL, VALVE STEM	8	8				
12	3LD–12168–K1	PAD, ADJUSTING (1.60)	16	16				UR
	3LD–12168–M1	PAD, ADJUSTING (1.65)	16	16				UR
	3LD–12168–R1	PAD, ADJUSTING (1.70)	16	16				UR
	3LD–12168–U1	PAD, ADJUSTING (1.75)	16	16				UR
	3LD–12168–W1	PAD, ADJUSTING (1.80)	16	16				UR
	3LD–12168–Y1	PAD, ADJUSTING (1.85)	16	16				UR
	3LD–12169–11	PAD, ADJUSTING (1.90)	16	16				UR
	3LD–12169–31	PAD, ADJUSTING (1.95)	16	16				UR
	3LD–12169–50	PAD, ADJUSTING (2.00)	16	16				UR
	3LD–12169–70	PAD, ADJUSTING (2.05)	16	16				UR
	3LD–12169–90	PAD, ADJUSTING (2.10)	16	16				UR
	3LD–12169–E0	PAD, ADJUSTING (2.15)	16	16				UR
	3LD–12169–G0	PAD, ADJUSTING (2.20)	16	16				UR
	3LD–12169–J0	PAD, ADJUSTING (2.25)	16	16				UR
	3LD–12169–L0	PAD, ADJUSTING (2.30)	16	16				UR
	3LD–12169–N0	PAD, ADJUSTING (2.35)	16	16				UR

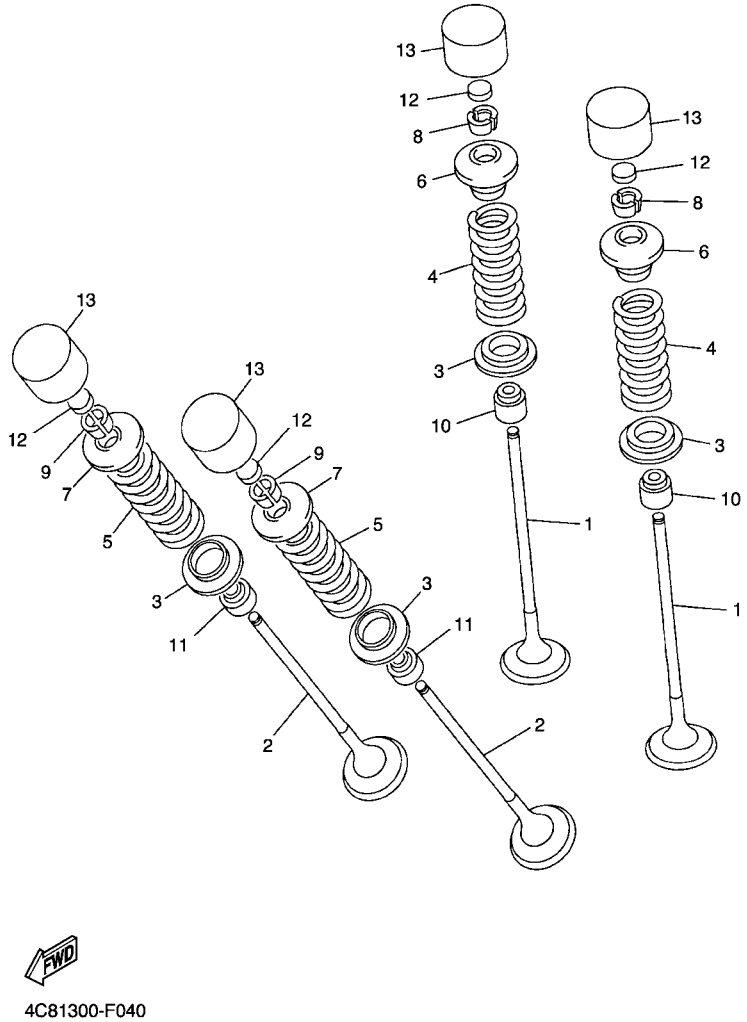

4C81300-F040

FIG. 4 VALVE

REF. NO.	PART NO.	DESCRIPTION	14BL	14BM				REMARKS
12	3LD–12169–T0	PAD, ADJUSTING (2.40)	16	16				UR
13	4C8–12153–20	LIFTER, VALVE	16	16				UR BLUE
	4C8–12153–30	LIFTER, VALVE	16	16				UR RED
	4C8–12153–09	LIFTER, VALVE (O/S)	16	16				AP GREEN

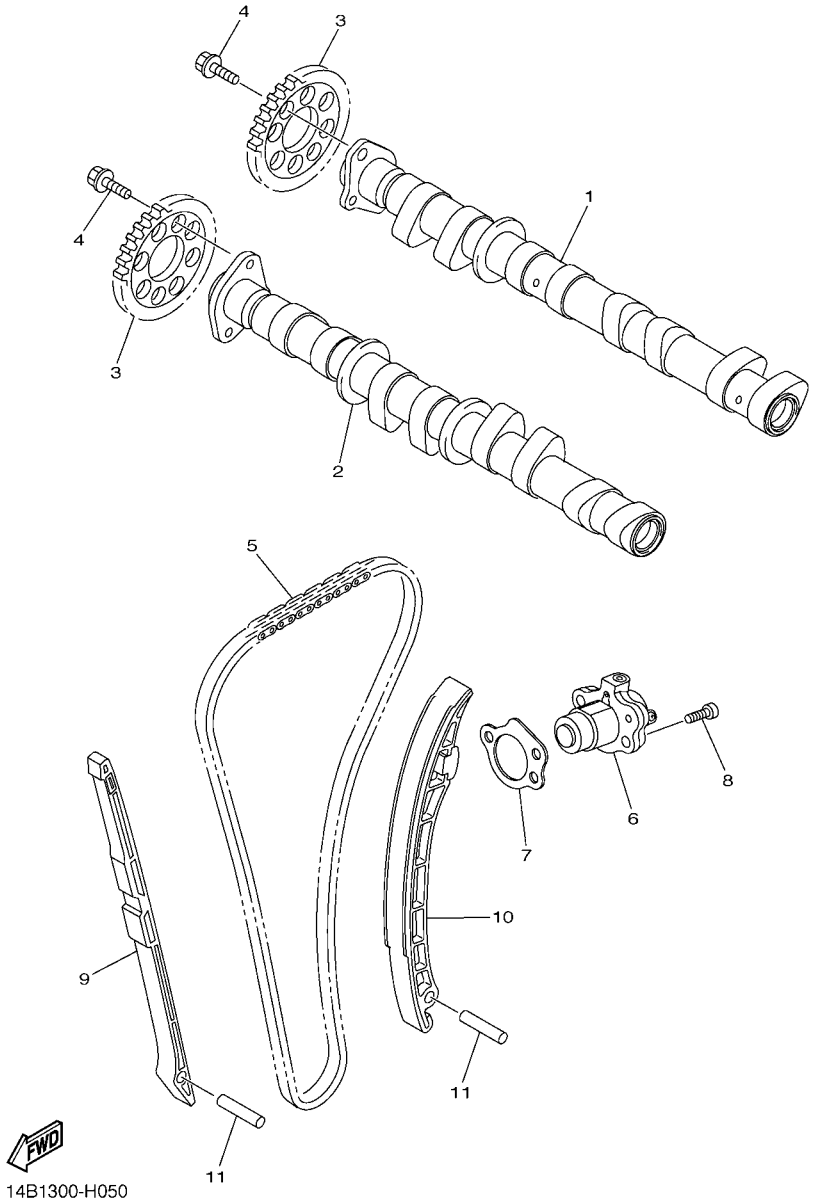

FIG. 5 CAMSHAFT & CHAIN

REF. NO.	PART NO.	DESCRIPTION	14BL	14BM				REMARKS
1	14B–12170–00	CAMSHAFT ASSY 1	1	1				
2	14B–12180–00	CAMSHAFT ASSY 2	1	1				
3	14B–12176–00	SPROCKET, CAM CHAIN	2	2				
4	90105–07006	BOLT, FLANGE	4	4				
5	94591–60126	CHAIN	1	1				
6	14B–12210–00	TENSIONER ASSY, CAM CHAIN	1	1				
7	14B–12213–00	GASKET, TENSIONER CASE	1	1				
8	91312–06025	BOLT	2	2				
9	14B–12251–00	DAMPER, CHAIN 1	1	1				
10	14B–12252–00	DAMPER, CHAIN 2	1	1				
11	93607–44002	PIN, DOWEL	2	2				

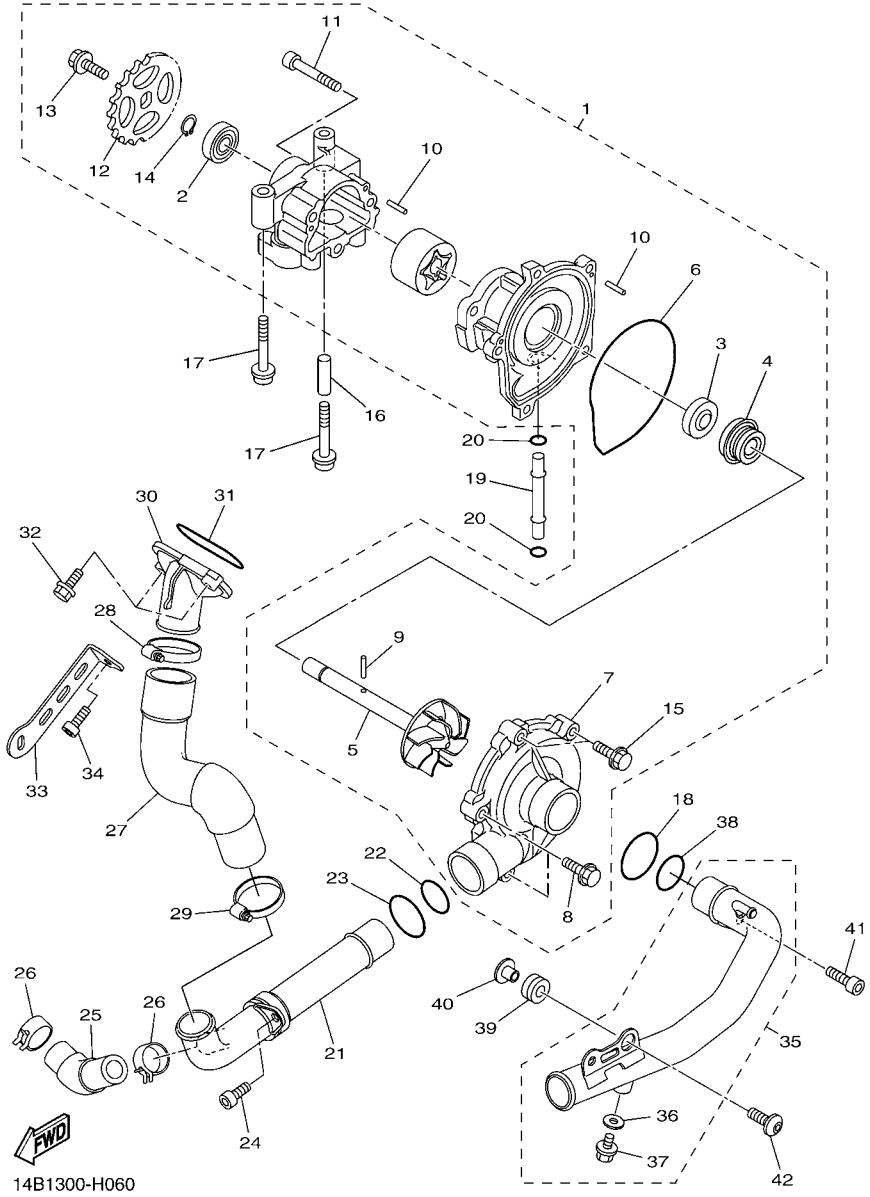

FIG. 6 WATER PUMP

REF. NO.	PART NO.	DESCRIPTION	14BL	14BM				REMARKS
1	14B–12420–00	WATER PUMP ASSY	1	1				
2	93306–00106	.BEARING	1	1				
3	14B–13338–00	.SEAL	1	1				
4	4C8–12438–00	.SEAL, MECHANICAL	1	1				
5	14B–12450–00	.IMPELLER SHAFT ASSY	1	1				
6	4XV–12439–00	.O-RING	1	1				
7	14B–12422–00	.COVER, HOUSING	1	1				
8	95022–06025	.BOLT, FLANGE	3	3				
9	93603–17070	.PIN, DOWEL	1	1				
10	93603–12007	.PIN, DOWEL	4	4				
11	91312–06045	.BOLT	3	3				
12	14B–13355–00	.SPROCKET, DRIVEN	1	1				
13	90105–06066	.BOLT, FLANGE	1	1				
14	99009–12400	.CIRCLIP	1	1				
15	95022–06020	.BOLT, FLANGE	2	2				
16	91808–30031	PIN, DOWEL	1	1				
17	90110–06167	BOLT, HEXAGON SOCKET HEAD	2	2				
18	93210–357A2	O-RING	1	1				
19	4XV–12485–00	PIPE 5	1	1				
20	93210–06667	O-RING	2	2				
21	14B–12481–00	PIPE 1	1	1				
22	93210–235A1	O-RING	1	1				
23	93210–27370	O-RING	1	1				
24	90110–06182	BOLT, HEXAGON SOCKET HEAD	1	1				
25	14B–12588–00	HOSE 5	1	1				
26	90467–200A0	CLIP	2	2				
27	14B–12576–00	HOSE 1	1	1				

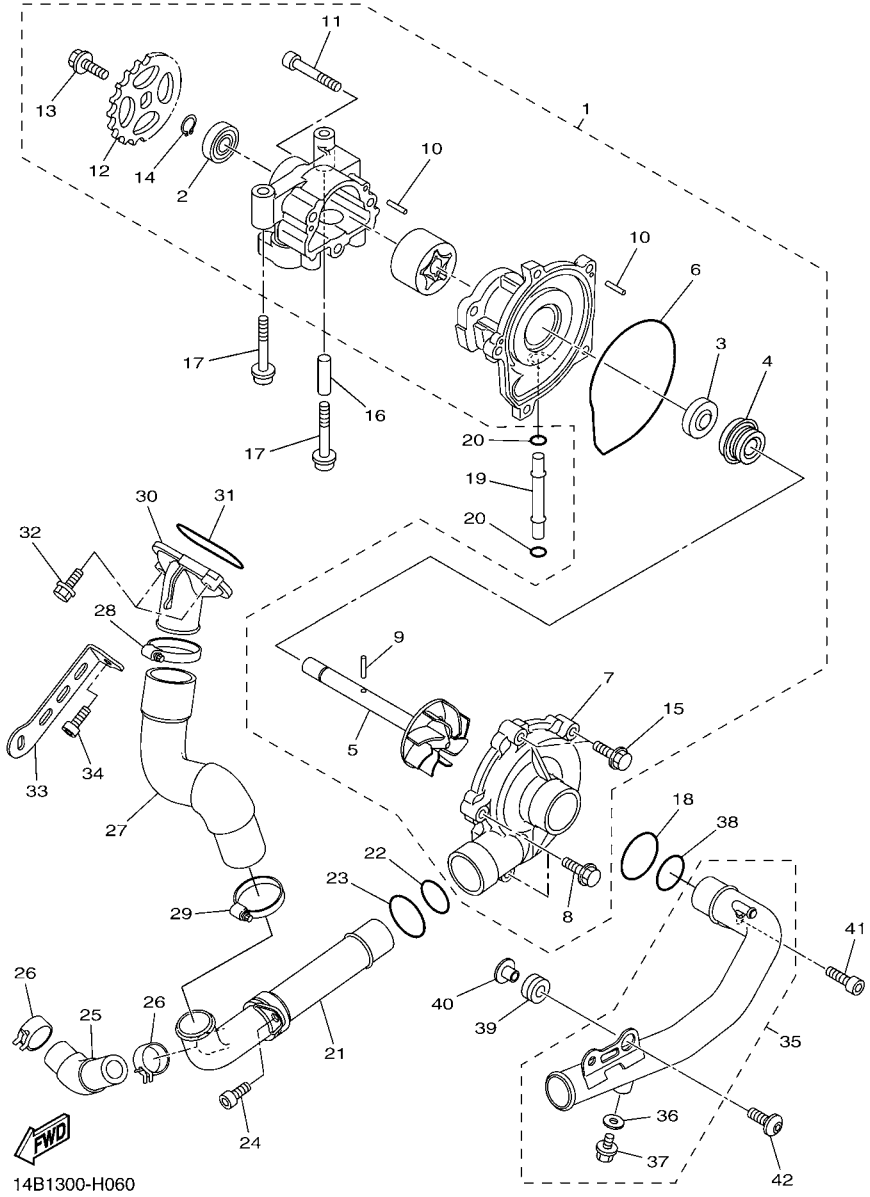

FIG. 6 WATER PUMP

REF. NO.	PART NO.	DESCRIPTION	14BL	14BM				REMARKS
28	90450–38040	HOSE CLAMP ASSY	1	1				
29	90450–35001	HOSE CLAMP ASSY	1	1				
30	14B–12469–10	JOINT 1	1	1				
31	93210–46044	O-RING	1	1				
32	95024–06025	BOLT, FLG.(SMALL HEAD)	2	2				
33	14B–12637–00	STAY 1	1	1				
34	91314–06012	BOLT, HEXAGON SOCKET HEAD	1	1				
35	14B–12484–00	PIPE 4	1	1				
36	90430–06014	.GASKET	1	1				
37	90153–06002	.SCREW, HEXAGON	1	1				
38	93210–235A1	O-RING	1	1				
39	90480–12010	GROMMET	1	1				
40	90387–06112	COLLAR	1	1				
41	90110–06182	BOLT, HEXAGON SOCKET HEAD	1	1				
42	90149–06022	SCREW	1	1				

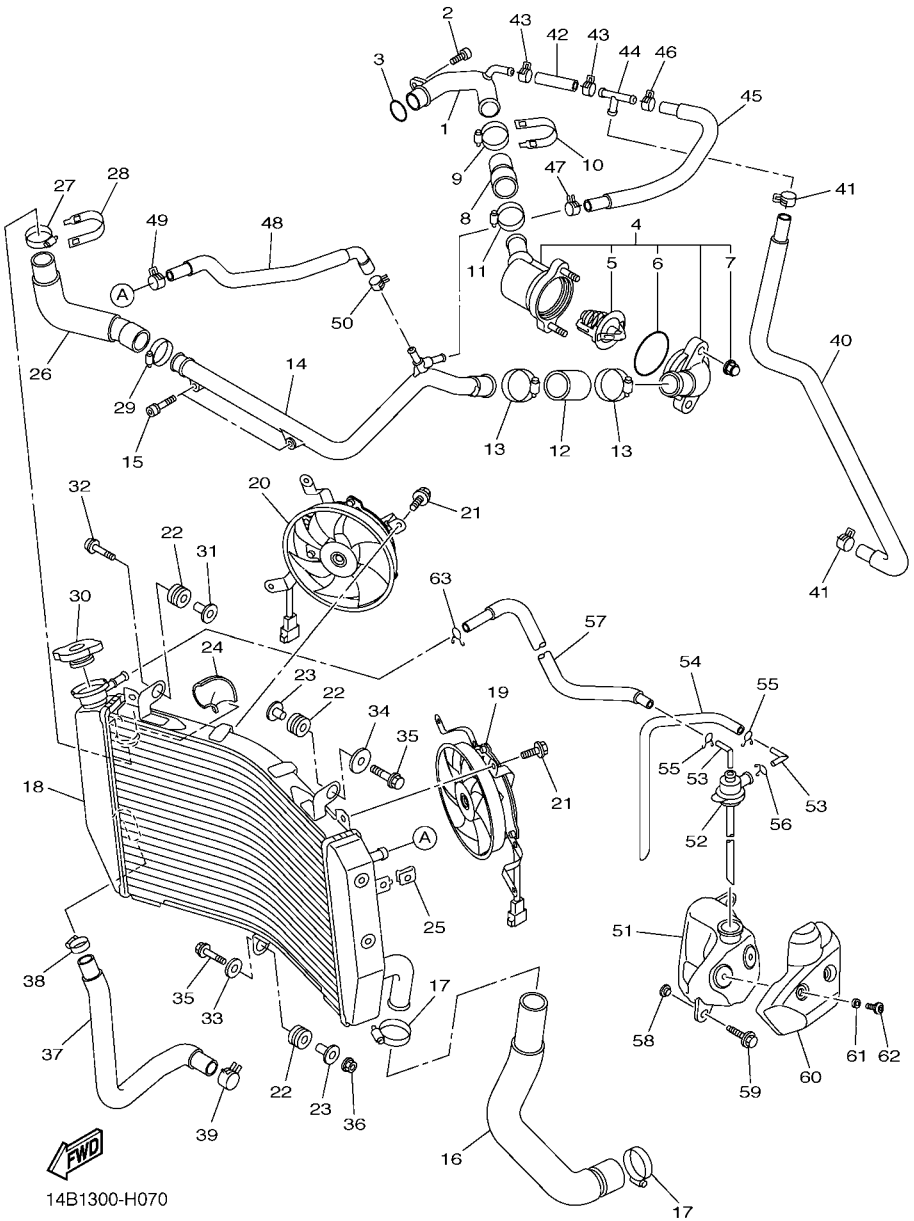

FIG. 7 RADIATOR & HOSE

REF. NO.	PART NO.	DESCRIPTION	14BL	14BM				REMARKS
1	14B–12485–00	PIPE 5	1	1				
2	90110–06182	BOLT, HEXAGON SOCKET HEAD	1	1				
3	93210–235A1	O-RING	1	1				
4	14B–12410–00	THERMOSTAT ASSY	1	1				
5	5LP–12411–00	.THERMOSTAT	1	1				
6	93210–49046	.O-RING	1	1				
7	90176–06014	.NUT, CROWN	2	2				
8	4C8–12579–00	HOSE 4	1	1				
9	90450–35001	HOSE CLAMP ASSY	1	1				
10	5GV–1246E–00	COVER 2	1	1				
11	90450–38040	HOSE CLAMP ASSY	1	1				
12	14B–12579–00	HOSE 4	1	1				
13	90450–38040	HOSE CLAMP ASSY	2	2				
14	14B–12482–00	PIPE 2	1	1				
15	90110–06256	BOLT, HEXAGON SOCKET HEAD	2	2				
16	14B–12578–00	HOSE 3	1	1				
17	90450–35001	HOSE CLAMP ASSY	2	2				
18	14B–12461–00	RADIATOR COMP	1	1				
19	14B–12405–00	BLOWER ASSY	1	1				
20	14B–12405–10	BLOWER ASSY	1	1				
21	5GJ–12675–00	BOLT, BLOWER HOLDING	6	6				
22	90480–15363	GROMMET	3	3				
23	90387–0614M	COLLAR	2	2				
24	14B–12465–00	DAMPER, RADIATOR	1	1				
25	5SL–12671–00	NUT 1	1	1				
26	14B–12551–00	HOSE 7	1	1				
27	90450–35001	HOSE CLAMP ASSY	1	1				

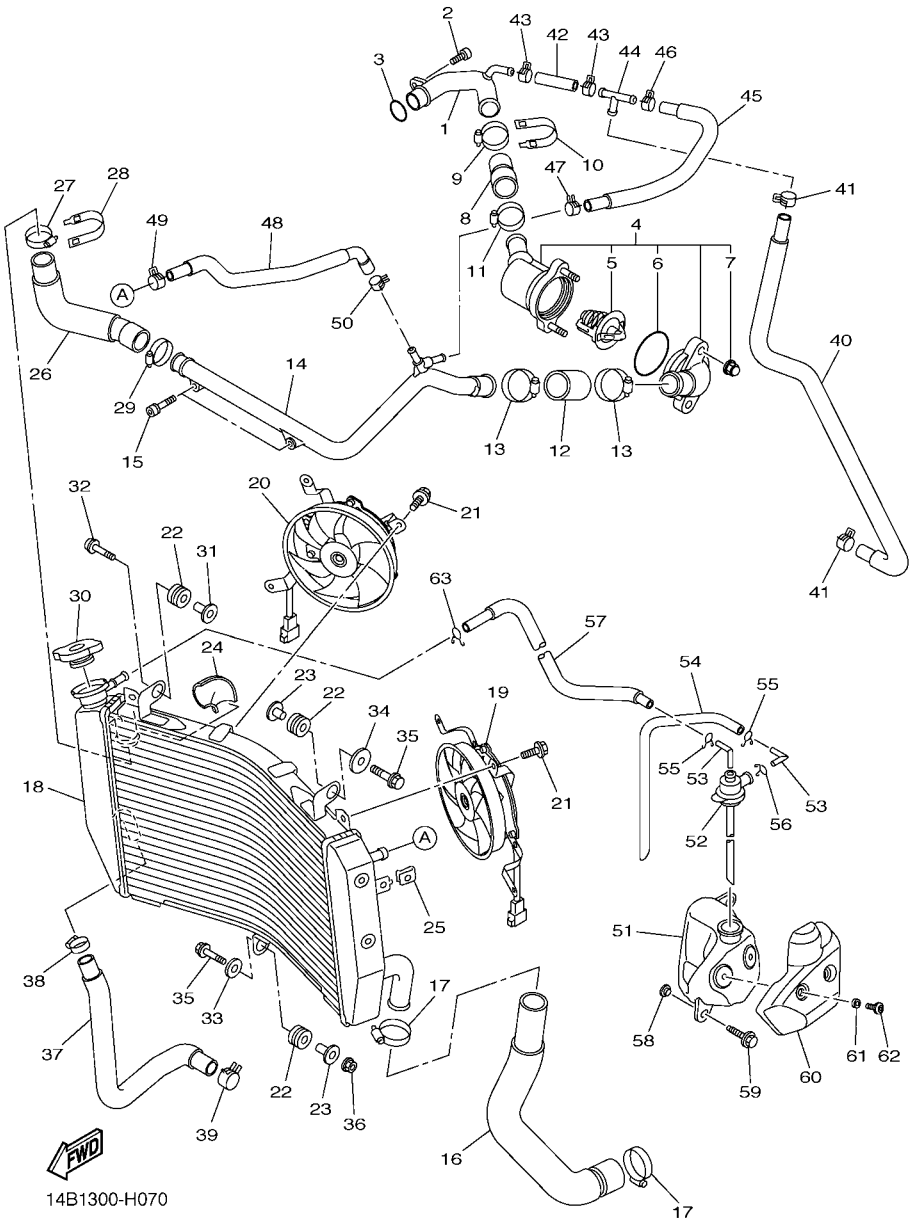

FIG. 7 RADIATOR & HOSE

REF. NO.	PART NO.	DESCRIPTION	14BL	14BM				REMARKS
28	5GV–1246E–00	COVER 2	1	1				
29	90450–38040	HOSE CLAMP ASSY	1	1				
30	5SL–12462–00	CAP, RADIATOR	1	1				
31	90387–0614M	COLLAR	1	1				
32	91317–06030	BOLT	1	1				
33	90201–06071	WASHER, PLATE	1	1				
34	90201–06074	WASHER, PLATE	1	1				
35	95827–06030	BOLT, FLANGE	2	2				
36	95607–06200	NUT, SELF U-FLANGE	1	1				
37	14B–12589–00	HOSE 6	1	1				
38	90450–22017	HOSE CLAMP ASSY	1	1				
39	90467–200A0	CLIP	1	1				
40	14B–1243A–00	HOSE 1	1	1				
41	90467–11090	CLIP	2	2				
42	14B–1243E–00	HOSE 2	1	1				
43	90467–11090	CLIP	2	2				
44	90413–07023	WAY 3	1	1				
45	14B–1244G–00	HOSE, 4	1	1				
46	90467–11090	CLIP	1	1				
47	90467–11044	CLIP	1	1				
48	14B–12552–00	HOSE 8	1	1				
49	90467–11090	CLIP	1	1				
50	90467–11044	CLIP	1	1				
51	14B–21871–00	TANK, RECOVERY	1	1				
52	14B–21875–00	CAP	1	1				
53	26H–21828–00	ELBOW	2	2				
54	90445–08036	HOSE	1	1				

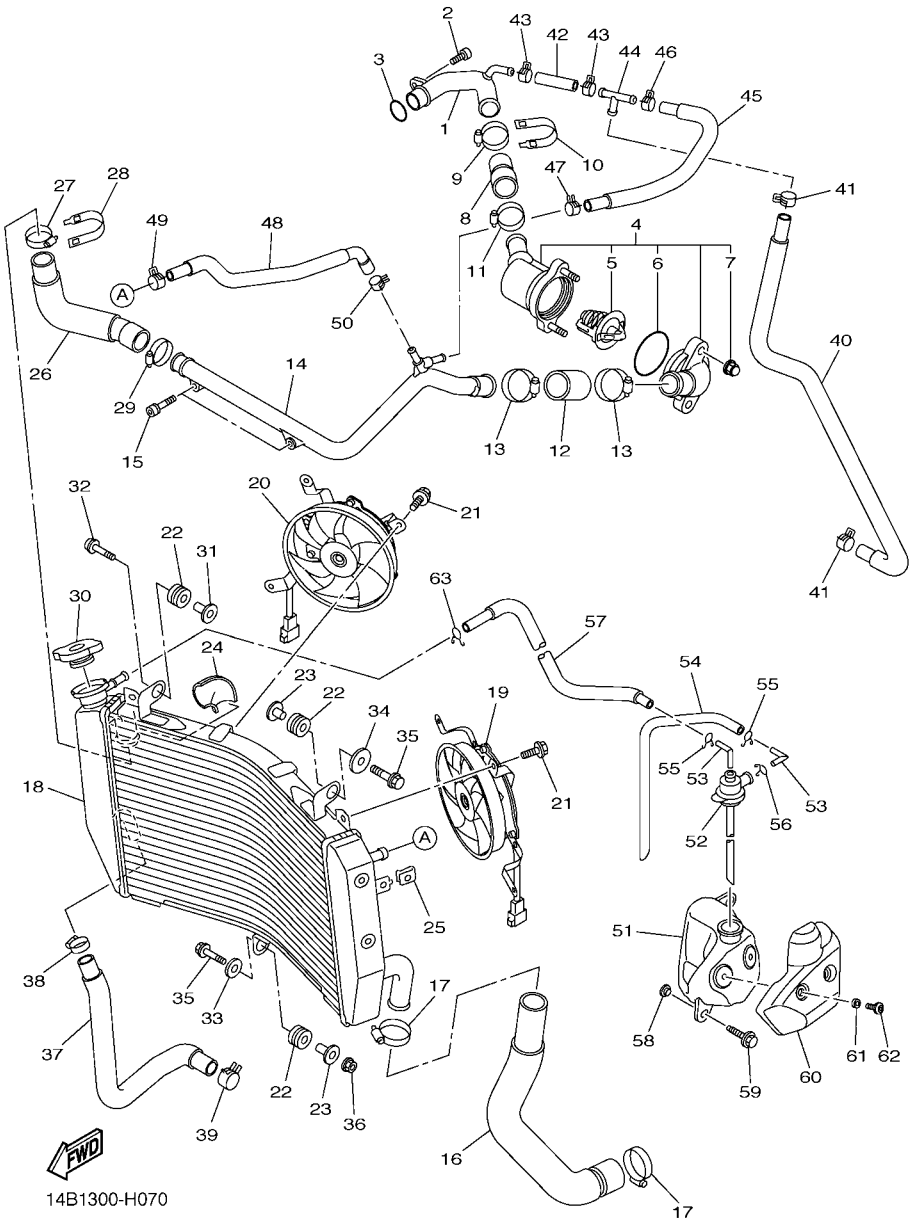

FIG. 7 RADIATOR & HOSE

REF. NO.	PART NO.	DESCRIPTION	14BL	14BM				REMARKS
55	90467–08003	CLIP	2	2				
56	90467–10M04	CLIP	1	1				
57	14B–1243F–00	HOSE,3	1	1				
58	90387–06681	COLLAR	2	2				
59	90119–06177	BOLT, WITH WASHER	2	2				
60	14B–2172W–00	COVER	1	1				
61	90387–06372	COLLAR	2	2				
62	90111–06119	BOLT,HEX. SOCKET BUTTON	2	2				
63	90467–08075	CLIP	1	1				

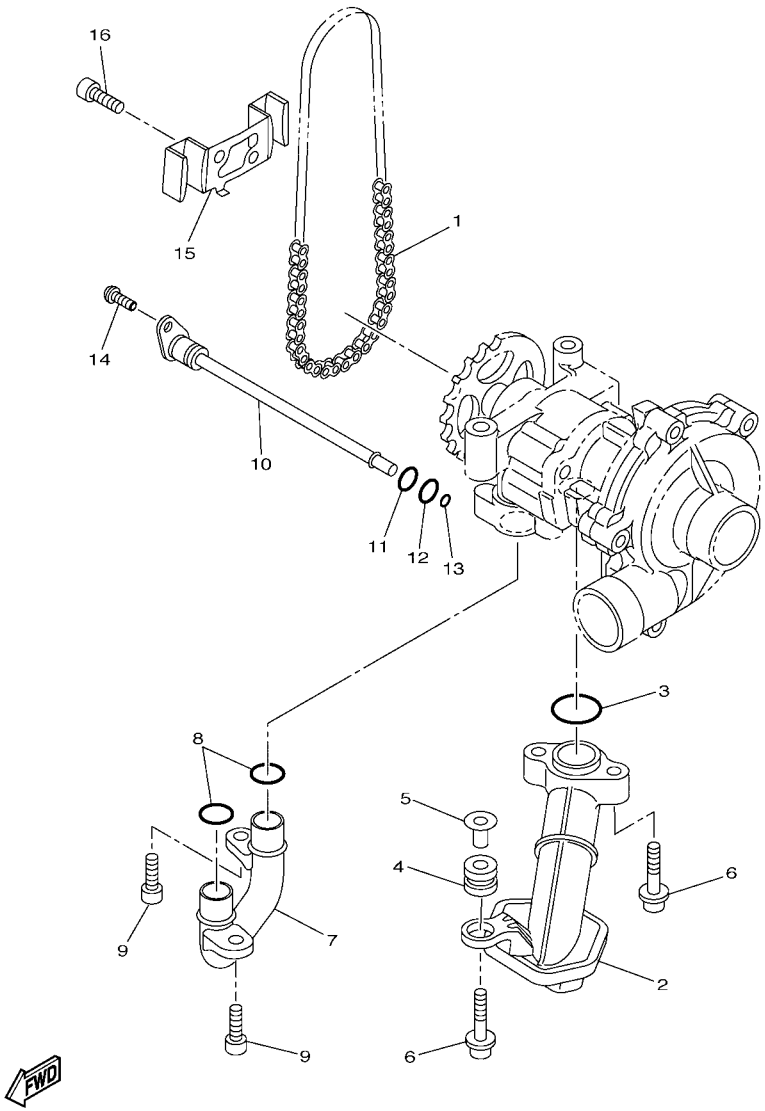

14B1300-H080

FIG. 8 OIL PUMP

REF. NO.	PART NO.	DESCRIPTION	14BL	14BM				REMARKS
1	94580–31082	CHAIN (DID25HT 82LE)	1	1				
2	14B–13410–00	STRAINER HOUSING ASSY	1	1				
3	93210–22M93	O-RING	1	1				
4	90480–13010	GROMMET	1	1				
5	5VY–13117–10	COLLAR, DISTANCE	1	1				
6	90110–06173	BOLT, HEXAGON SOCKET HEAD	3	3				
7	14B–13416–00	PIPE, OIL 1	1	1				
8	93210–14003	O-RING	2	2				
9	90110–06182	BOLT, HEXAGON SOCKET HEAD	2	2				
10	14B–1316E–00	PIPE, DELIVERY 5	1	1				
11	93210–12010	O-RING	1	1				
12	93210–09525	O-RING	1	1				
13	93210–06667	O-RING	1	1				
14	90149–06071	SCREW	1	1				
15	14B–13898–00	HOLDER	1	1				
16	90110–06182	BOLT, HEXAGON SOCKET HEAD	2	2				

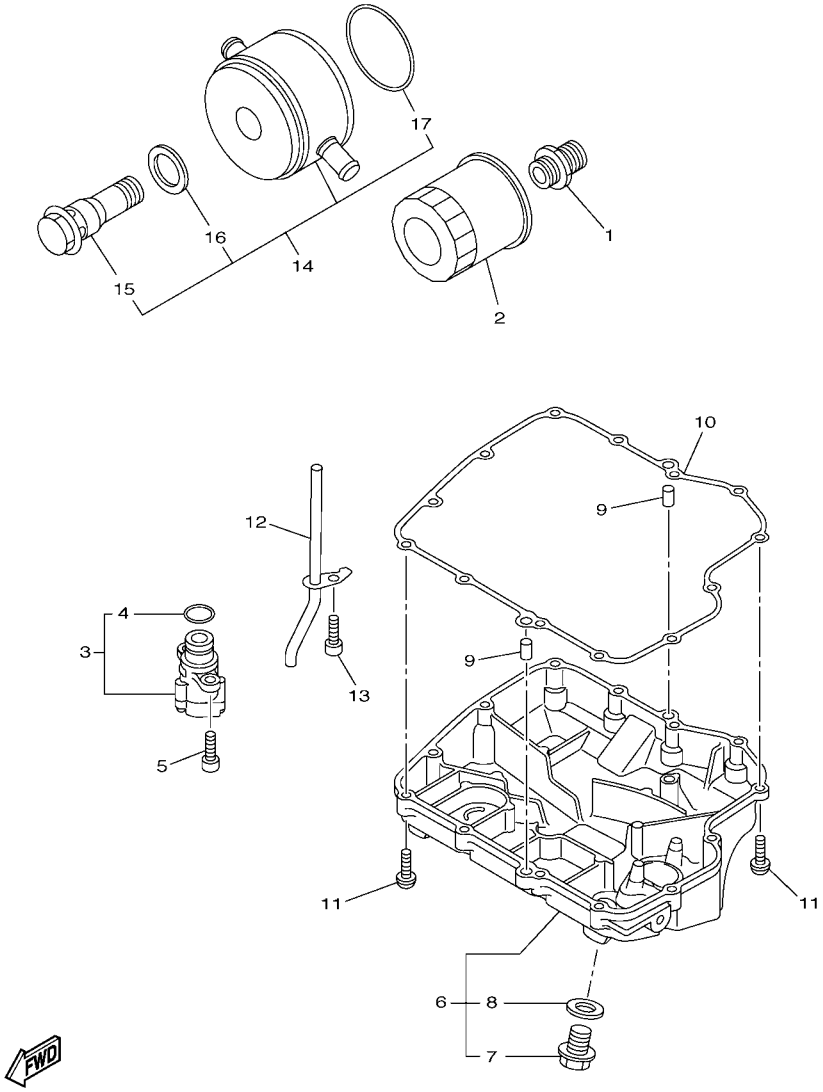

14B1300-H090

FIG. 9 OIL CLEANER

REF. NO.	PART NO.	DESCRIPTION	14BL	14BM				REMARKS
1	90401–20145	BOLT, UNION	1	1				
2	5GH–13440–20	ELEMENT ASSY, OIL CLEANER	1	1				
3	14B–13490–00	RELIEF VALVE ASSY	1	1				
4	93210–15566	.O-RING	1	1				
5	90110–06169	BOLT, HEXAGON SOCKET HEAD	2	2				
6	14B–13400–00	STRAINER COVER ASSY	1	1				
7	90340–14132	.PLUG, STRAIGHT SCREW	1	1				
8	214–11198–01	.GASKET	1	1				
9	99530–08012	PIN, DOWEL	2	2				
10	14B–13414–00	GASKET, STRAINER COVER	1	1				
11	90149–06079	SCREW	13	13				
12	14B–13161–00	PIPE, DELIVERY 1	1	1				
13	90110–06182	BOLT, HEXAGON SOCKET HEAD	1	1				
14	14B–13470–00	OIL COOLER ASSY	1	1				
15	5FL–12822–00	.BOLT, UNION	1	1				
16	5EB–13475–00	.GASKET	1	1				
17	14B–13473–00	.O-RING	1	1				

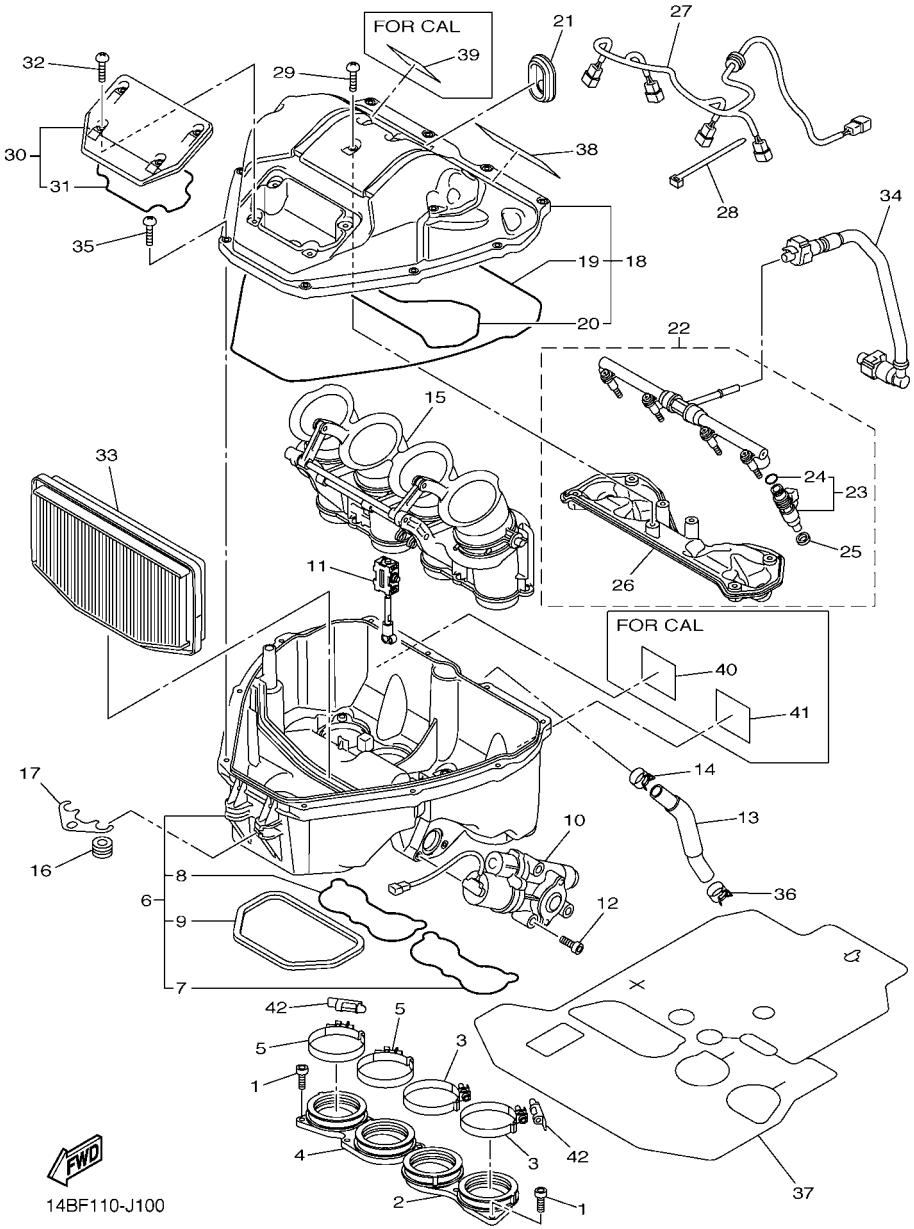

FIG. 10 INTAKE

REF. NO.	PART NO.	DESCRIPTION	14BL	14BM				REMARKS
1	90110–06193	BOLT, HEXAGON SOCKET HEAD	7	7				
2	14B–13595–00	JOINT	1	1				
3	90450–60004	HOSE CLAMP ASSY	2	2				
4	14B–13596–00	JOINT, CARBURETOR 2	1	1				
5	90450–60004	HOSE CLAMP ASSY	2	2				
6	14B–14411–01	CASE, AIR CLEANER 1	1	1				
7	14B–14457–00	.SEAL	1	1				
8	14B–14462–00	.SEAL	1	1				
9	14B–14425–00	.DAMPER 1	1	1				
10	14B–85870–00	GEARED MOTOR COMP. 2	1	1				
11	14B–14490–00	SHAFT ASSY	1	1				
12	90110–05047	BOLT, HEXAGON SOCKET HEAD	3	3				
13	14B–15393–00	PIPE, BREATHER 2	1	1				
14	90467–160A2	CLIP	1	1				
15	14B–1440B–00	JOINT ASSY	1	1				
16	14B–14445–00	GROMMET	2	2				
17	14B–14498–00	STAY 1	1	1				
18	14B–14421–01	CASE, AIR CLEANER 2	1	1				
19	14B–14452–00	.SEAL	1	1				
20	14B–1446R–00	.SEAL	1	1				
21	13S–14445–00	GROMMET	1	1				
22	14B–14402–01	CAP ASSY, AIR CLEANER	1	1				
23	14B–13761–10	.INJECTOR	4	4				
24	5PS–14147–00	..O-RING	1	1				
25	8FP–13556–00	.GASKET, MANIFOLD	4	4				
26	14B–13767–01	.CAP, INJECTOR	1	1				
27	14B–82318–00	WIRE, SUB-LEAD	1	1				

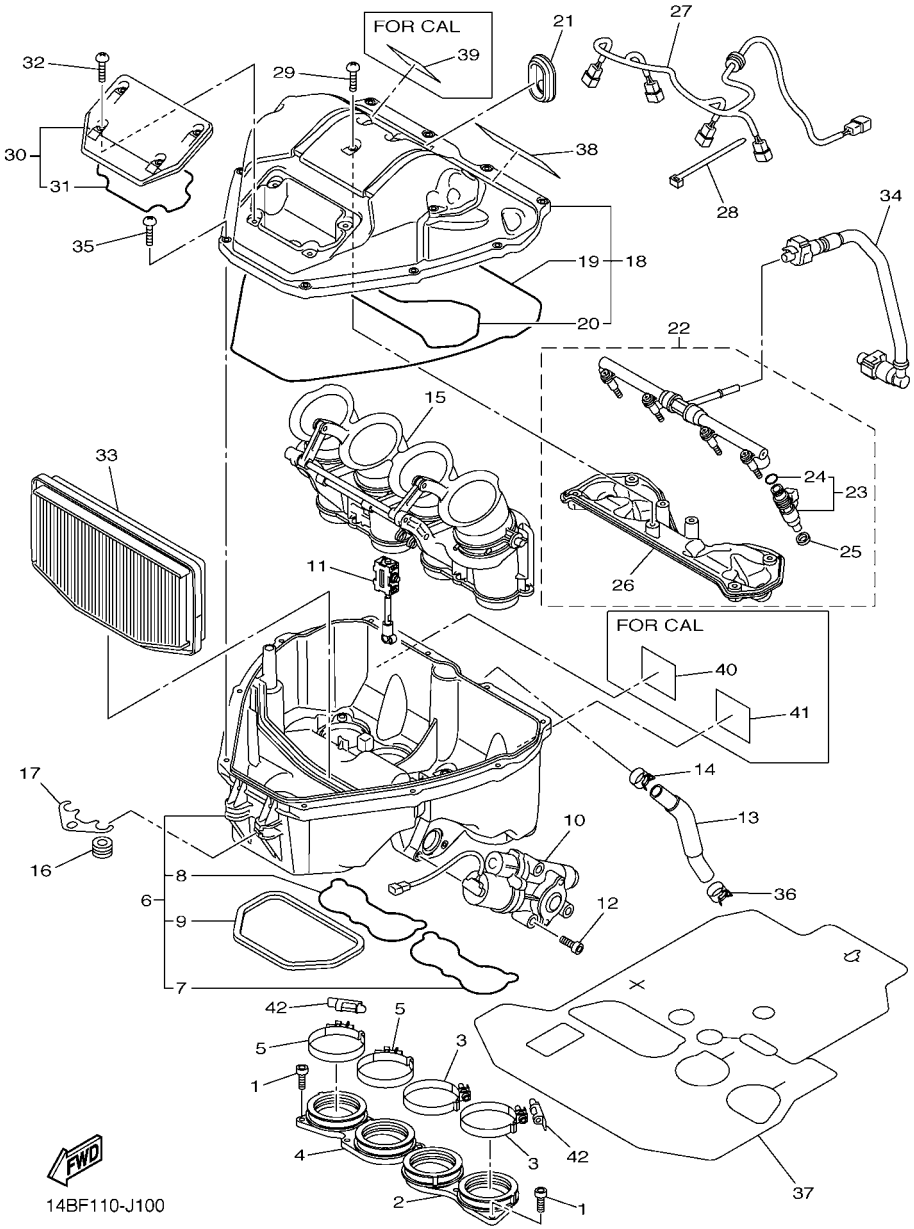

FIG. 10 INTAKE

REF. NO.	PART NO.	DESCRIPTION	14BL	14BM				REMARKS
28	90464–16061	CLAMP	1	1				
29	92012–05014	BOLT, BUTTON HEAD	7	7				
30	14B–14412–01	CAP, CLEANER CASE 1	1	1				
31	14B–14467–00	.SEAL	1	1				
32	98902–05014	SCREW, BIND	4	4				
33	14B–14451–00	ELEMENT, AIR CLEANER	1	1				
34	14B–13972–00	PIPE, FUEL 2	1	1				
35	98902–05020	SCREW, BIND	10	10				
36	90467–160A2	CLIP	1	1				
37	14B–12682–00	PROTECTOR, HEAT	1	1				
38	14B–2179W–10	PLATE, EPA (NON CALIFORNIA)	1					
	14B–2176P–10	PLATE, EPA (CALIFORNIA)		1				FOR CALIFORNIA
39	14B–21684–00	PLATE, ROUTING		1				FOR CALIFORNIA
40	14B–21686–00	PLATE, ROUTING 2		1				FOR CALIFORNIA
41	14B–2178A–00	LABEL		1				FOR CALIFORNIA
42	2C0–13881–00	COVER 1	2	2				

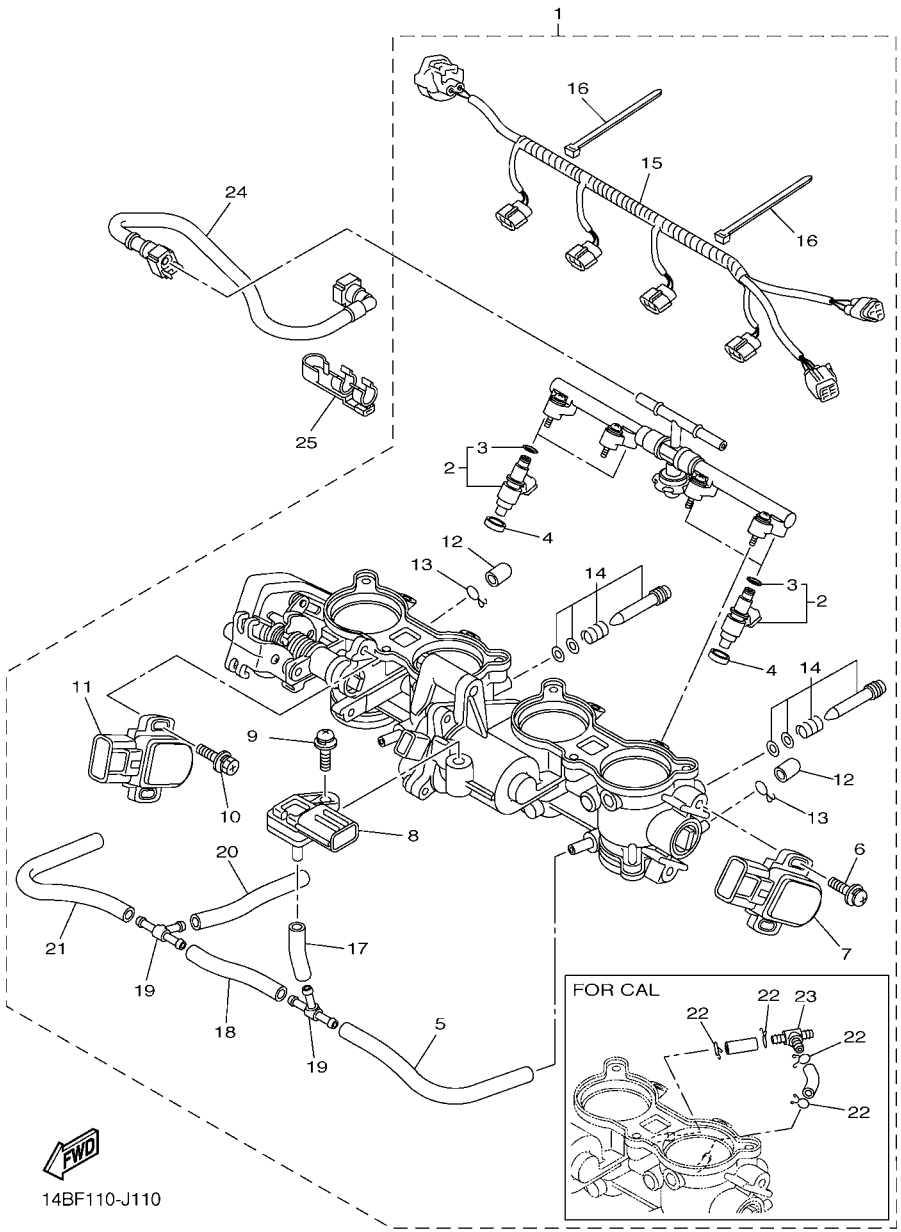

FIG. 11 INTAKE 2

REF. NO.	PART NO.	DESCRIPTION	14BL	14BM				REMARKS
1	14B–13750–00	THROTTLE BODY ASSY	1					
	14B–13750–10	THROTTLE BODY ASSY		1				FOR CALIFORNIA
2	14B–13761–00	.INJECTOR	4	4				
3	5PS–14147–00	..O-RING	1	1				
4	8FP–13556–00	.GASKET, MANIFOLD	4	4				
5	5PW–14396–00	.PIPE	1	1				
6	8CC–14216–10	.SCREW	2	2				
7	13S–85885–00	.THROTTLE SENSOR ASSY	1	1				
8	2C0–82380–00	.SENSOR, PRESSURE	1	1				
9	2C0–14216–00	.SCREW	1	1				
10	5FL–14216–00	.SCREW	2	2				
11	13S–85884–00	.ACCELERATOR SENSOR ASSY	1	1				
12	895–14169–00	.CAP	4	4				
13	8A7–14139–00	.CLIP, PIPE	4	4				
14	2C0–14105–00	.PILOT SCREW SET	4	4				
15	14B–82386–00	.EXTENSION, WIRE HARNESS	1	1				
16	4KM–14137–00	.CLIP	2	2				
17	5FL–14348–10	.PIPE 1	1	1				
18	5JW–24311–00	.PIPE, FUEL 1	1	1				
19	68V–24376–00	.PIPE, JOINT 1	2	2				
20	5JW–14348–00	.PIPE 1	1	1				
21	5PW–14349–00	.PIPE	1	1				
22	90467–09006	.CLIP		4				FOR CALIFORNIA
23	90413–06031	.WAY 3		1				FOR CALIFORNIA
24	14B–13971–00	PIPE, FUEL 1	1	1				
25	90464–16005	CLAMP	1	1				

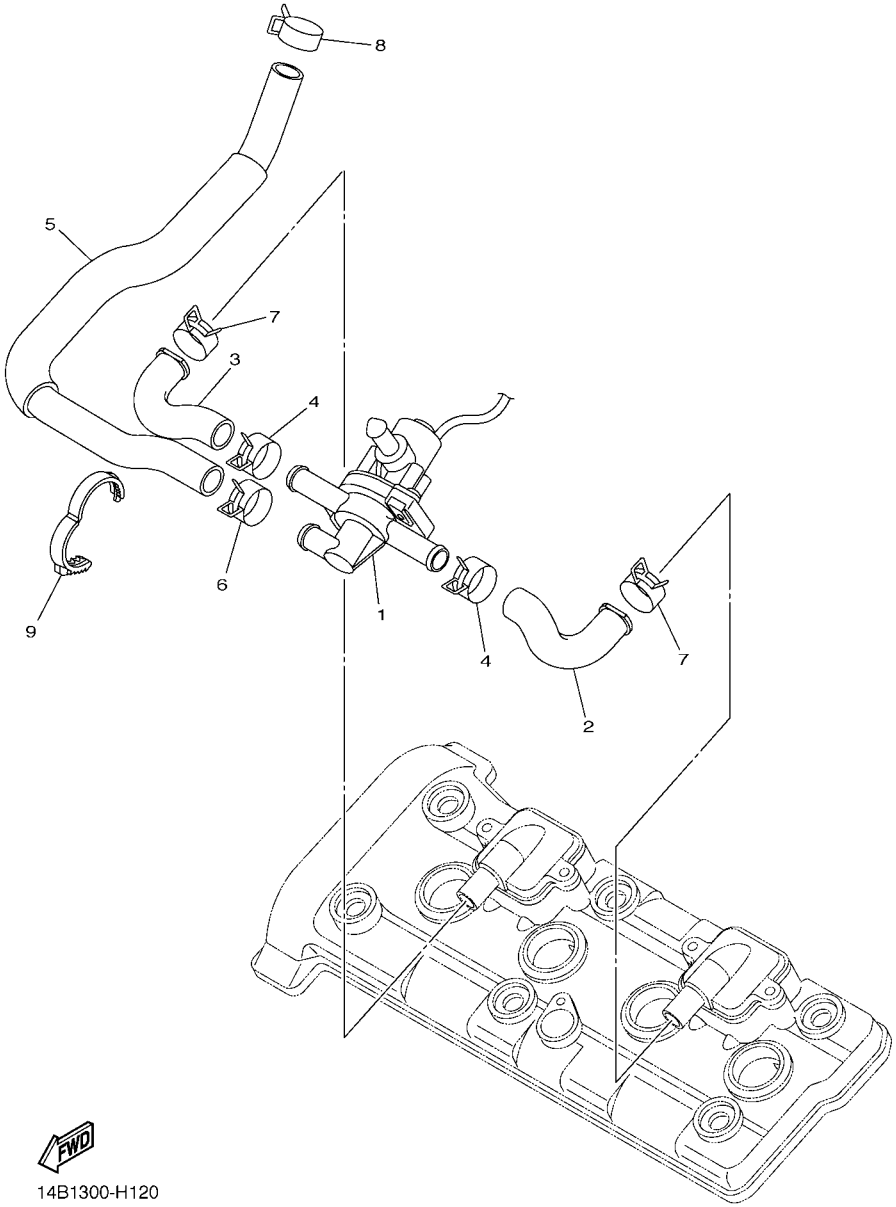

FIG. 12 AIR INDUCTION SYSTEM

REF. NO.	PART NO.	DESCRIPTION	14BL	14BM				REMARKS
1	2D1–14840–00	AIR CUT VALVE ASSY	1	1				
2	4C8–14881–01	HOSE, BEND 1	1	1				
3	4C8–14882–01	HOSE, BEND 2	1	1				
4	90467–18172	CLIP	2	2				
5	14B–14883–00	HOSE, BEND 3	1	1				
6	90467–18172	CLIP	1	1				
7	90467–180A0	CLIP	2	2				
8	90467–17003	CLIP	1	1				
9	90464–28003	CLAMP	1	1				

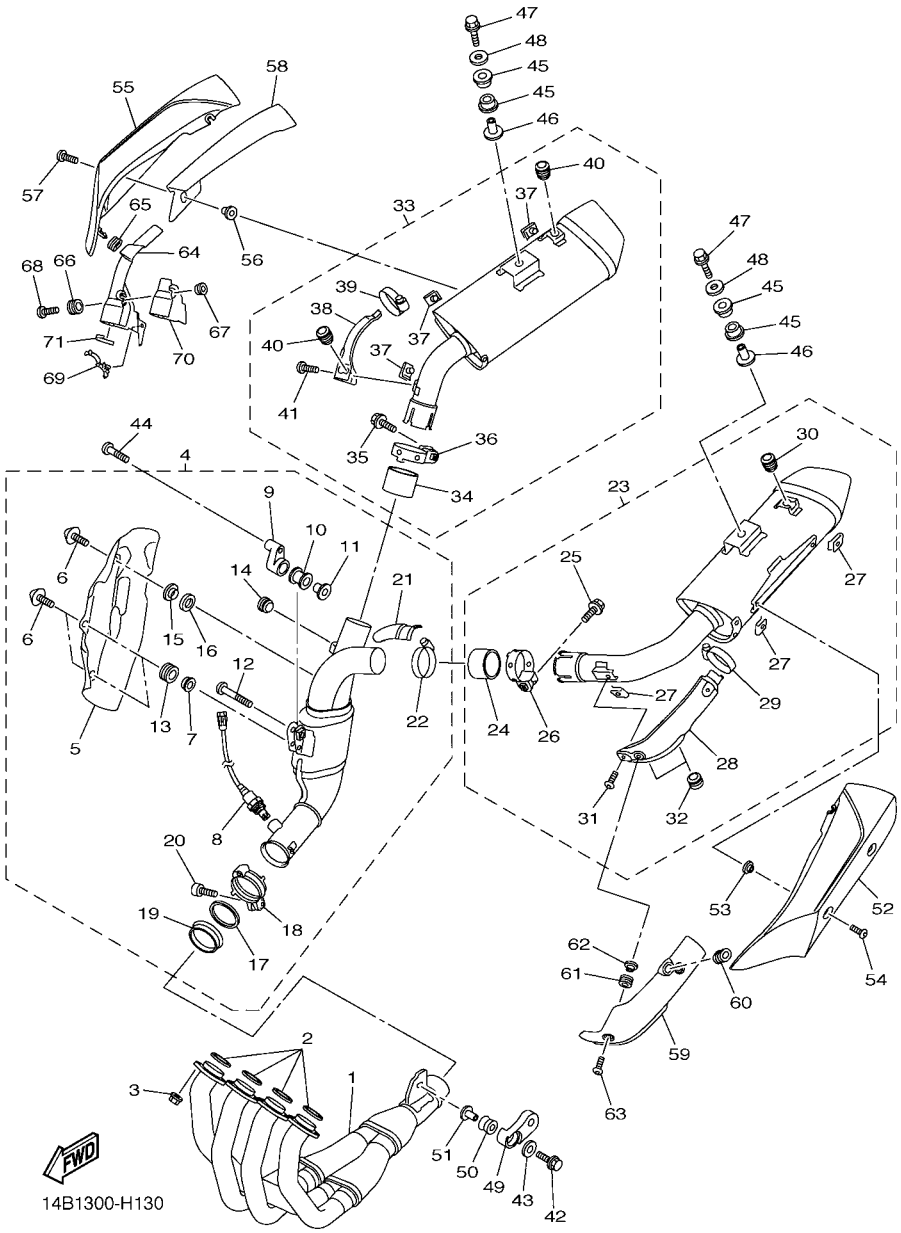

FIG. 13 EXHAUST

REF. NO.	PART NO.	DESCRIPTION	14BL	14BM				REMARKS
1	14B–14602–00	EXHAUST PIPE COMP.	1	1				
2	4FM–14613–00	GASKET, EXHAUST PIPE	4	4				
3	90179–08410	NUT	8	8				
4	14B–14740–00	CATALYST ASSY.	1	1				
5	14B–14738–00	.PROTECTOR, MUFFLER 3	1	1				
6	90110–06200	.BOLT, HEXAGON SOCKET HEAD	3	3				
7	90387–06112	.COLLAR	2	2				
8	14B–8592A–00	.SENSOR, OXYGEN	1	1				
9	14B–21445–00	.STAY, MUFFLER 1	1	1				
10	4XV–27424–00	.DAMPER, MUFFLER	1	1				
11	90387–08005	.COLLAR	1	1				
12	92014–08035	.BOLT, BUTTON HEAD	1	1				
13	90480–12579	.GROMMET	2	2				
14	2D1–14737–00	.DAMPER, MUFFLER	1	1				
15	90387–06217	.COLLAR	1	1				
16	90201–08080	.WASHER, PLATE	1	1				
17	14B–14623–00	.GASKET, EXHAUST PIPE	1	1				
18	14B–14725–00	.BAND, MUFFLER	1	1				
19	14B–14618–00	.RING, STOPPER	1	1				
20	90110–06343	.BOLT, HEXAGON SOCKET HEAD	1	1				
21	14B–1465U–00	.PLATE, PROTECTOR 3	1	1				
22	90450–45001	.HOSE CLAMP ASSY	1	1				
23	14B–14710–10	MUFFLER ASSY 1	1	1				
24	5VY–14714–00	.GASKET, MUFFLER	1	1				
25	90105–08063	.BOLT, FLANGE	1	1				
26	3D8–14715–00	.BAND, MUFFLER	1	1				
27	90183–060A2	.NUT, SPRING	3	3				

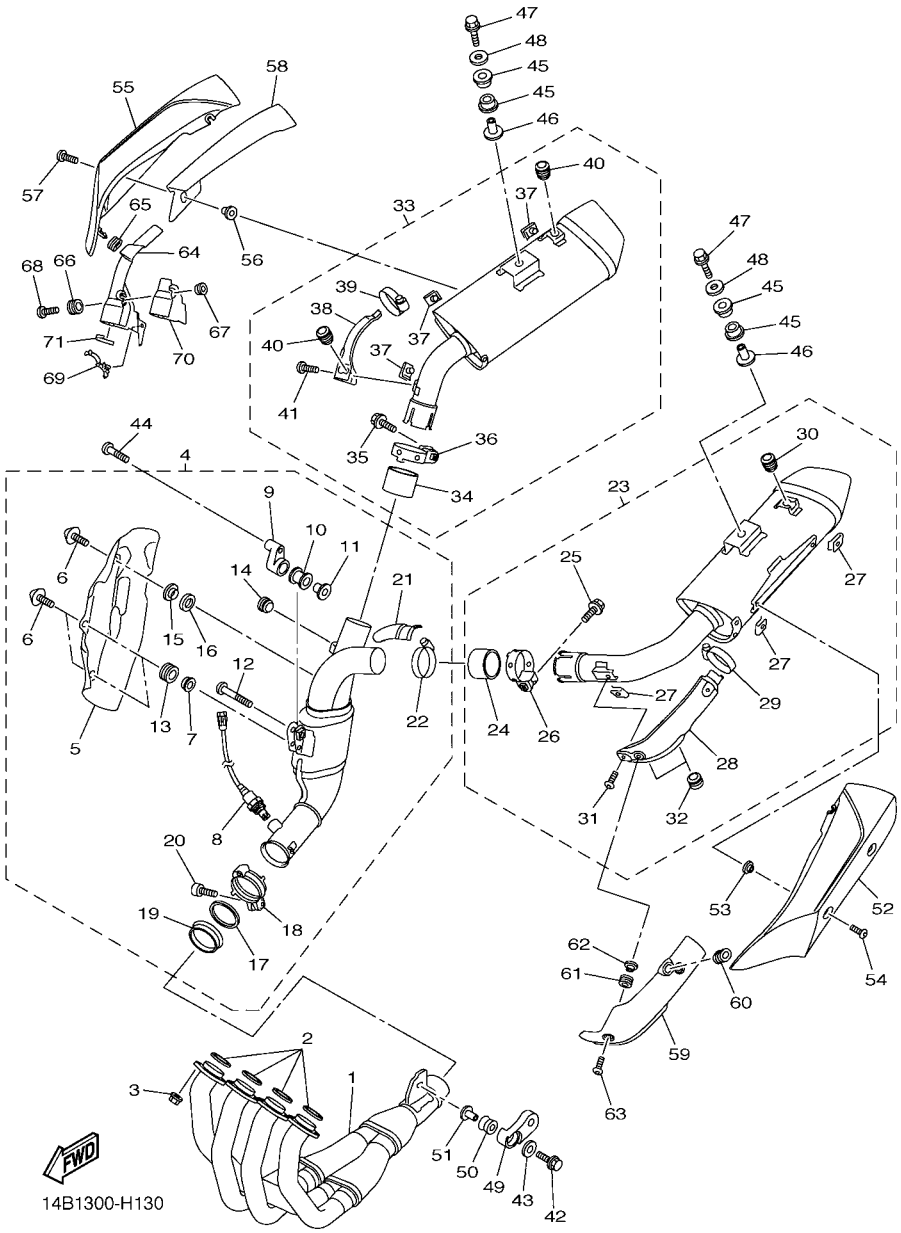

FIG. 13 EXHAUST

REF. NO.	PART NO.	DESCRIPTION	14BL	14BM				REMARKS
28	14B–1465R–00	.PLATE, PROTECTOR	1	1				
29	90450–45001	.HOSE CLAMP ASSY	1	1				
30	3D7–14737–00	.DAMPER, MUFFLER	1	1				
31	92012–06010	.BOLT, BUTTON HEAD	1	1				
32	4FM–24181–00	.DAMPER, LOCATING 1	2	2				
33	14B–14720–10	MUFFLER ASSY 2	1	1				
34	5VY–14714–00	.GASKET, MUFFLER	1	1				
35	90105–08063	.BOLT, FLANGE	1	1				
36	3D8–14715–00	.BAND, MUFFLER	1	1				
37	90183–060A2	.NUT, SPRING	3	3				
38	14B–1465T–00	.PLATE, PROTECTOR	1	1				
39	90450–45001	.HOSE CLAMP ASSY	1	1				
40	3D7–14737–00	.DAMPER, MUFFLER	2	2				
41	92012–06010	.BOLT, BUTTON HEAD	1	1				
42	95812–08040	BOLT, FLANGE	1	1				
43	90201–087G2	WASHER, PLATE	1	1				
44	90111–08071	BOLT,HEX. SOCKET BUTTON	1	1				
45	14B–27424–00	DAMPER, FOOTREST 2	4	4				
46	90387–08020	COLLAR	2	2				
47	95814–08045	BOLT, FLANGE	2	2				
48	90201–08034	WASHER, PLATE	2	2				
49	14B–21446–00	STAY, MUFFLER 2	1	1				
50	5VY–14747–00	DAMPER, MUFFLER	1	1				
51	90387–08021	COLLAR	1	1				
52	14B–14718–00	PROTECTOR, MUFFLER 1	1	1				
53	90387–06170	COLLAR	2	2				
54	90111–06127	BOLT,HEX. SOCKET BUTTON	2	2				

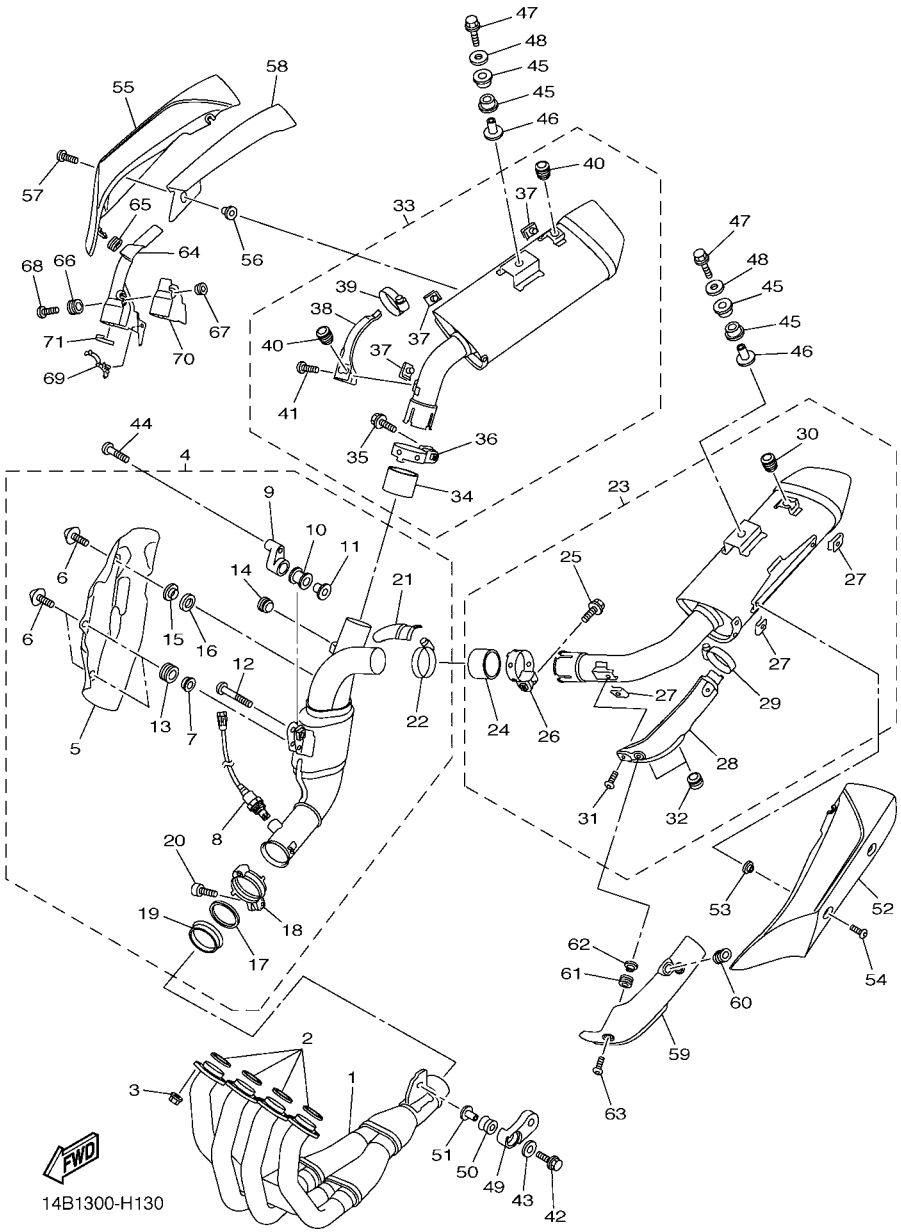

FIG. 13 EXHAUST

REF. NO.	PART NO.	DESCRIPTION	14BL	14BM				REMARKS
55	14B–14728–00	PROTECTOR, MUFFLER 2	1	1				
56	90387–06170	COLLAR	2	2				
57	90111–06127	BOLT,HEX. SOCKET BUTTON	2	2				
58	14B–1476P–00	SEAT	1	1				
59	14B–2163E–00	COVER, REAR FENDER 2	1	1				
60	90480–01558	GROMMET	1	1				
61	90480–12581	GROMMET	2	2				
62	90387–087L0	COLLAR	2	2				
63	90111–06095	BOLT,HEX. SOCKET BUTTON	2	2				
64	14B–2163F–00	COVER, REAR FENDER 3	1	1				
65	90480–01558	GROMMET	1	1				
66	90480–12581	GROMMET	2	2				
67	90387–087L0	COLLAR	2	2				
68	90111–06095	BOLT,HEX. SOCKET BUTTON	2	2				
69	90464–16006	CLAMP	1	1				
70	14B–1478P–00	SEAT	1	1				
71	14B–1479P–00	SEAT 5	1	1				

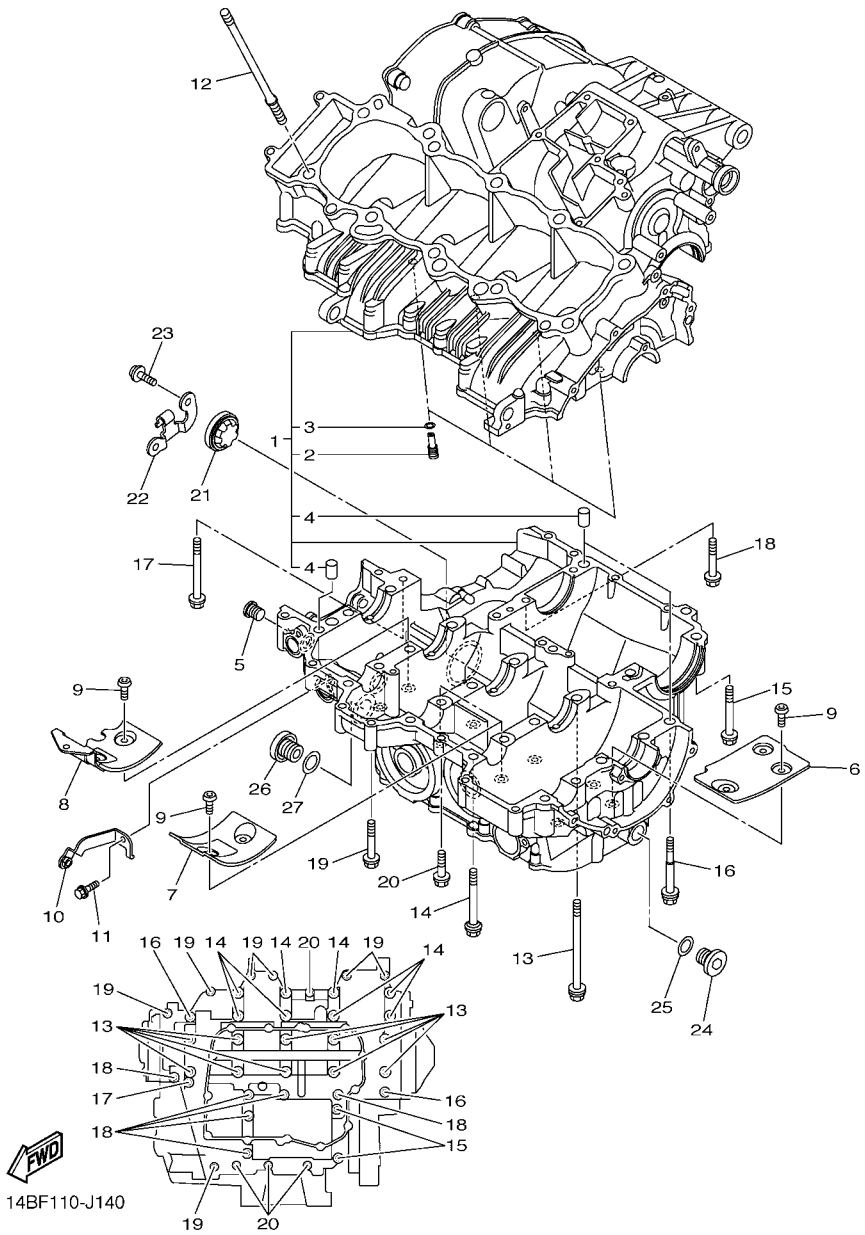

FIG. 14 CRANKCASE

REF. NO.	PART NO.	DESCRIPTION	14BL	14BM				REMARKS
1	14B–15100–09	CRANKCASE ASSY	1	1				
2	5EB–15155–00	.NOZZLE 3	4	4				
3	93210–04092	.O-RING	4	4				
4	99530–10014	.PIN, DOWEL	3	3				
5	90340–12003	PLUG, STRAIGHT SCREW	1	1				
6	14B–15123–00	PLATE, BAFFLE 1	1	1				
7	14B–15124–00	PLATE, BUFFLE 2	2	2				
8	14B–15133–00	PLATE, BUFFLE 3	1	1				
9	90149–06082	SCREW	10	10				
10	14B–28322–00	STAY 2	1	1				
11	90105–06181	BOLT, FLANGE	1	1				
12	90116–10051	BOLT, STUD	10	10				
13	90119–09010	BOLT, WITH WASHER	10	10				
14	14B–15156–00	BOLT, CRANKCASE JOURNAL	8	8				
15	95812–08060	BOLT, FLANGE	2	2				
16	90109–06100	BOLT	2	2				
17	90105–06165	BOLT, FLANGE	1	1				
18	95812–06060	BOLT, FLANGE	6	6				
19	95812–06050	BOLT, FLANGE	7	7				
20	95812–06040	BOLT, FLANGE	4	4				
21	5PW–15361–00	GAUGE, LEVEL	1	1				
22	14B–15441–01	HOLDER, CLUTCH CABLE	1	1				
23	90110–06340	BOLT, HEXAGON SOCKET HEAD	2	2				
24	36Y–15189–00	PLUG	2	2				
25	93210–16325	O-RING	2	2				
26	4H7–15189–00	PLUG	1	1				
27	93210–22001	O-RING	1	1				

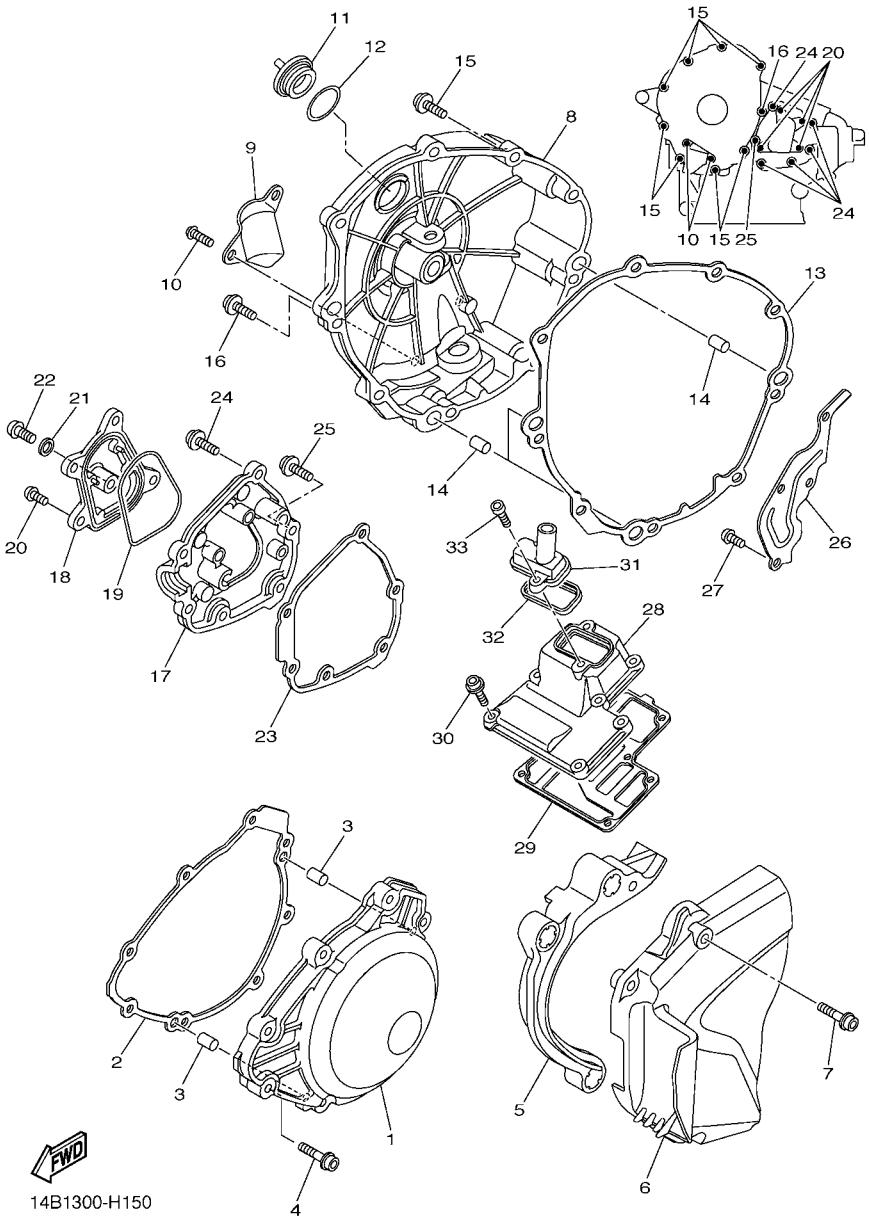

FIG. 15 CRANKCASE COVER 1

REF. NO.	PART NO.	DESCRIPTION	14BL	14BM				REMARKS
1	14B–15411–00	COVER, CRANKCASE 1	1	1				
2	14B–15451–00	GASKET, CRANKCASE COVER 1	1	1				
3	99530–08012	PIN, DOWEL	2	2				
4	90110–06326	BOLT, HEXAGON SOCKET HEAD	8	8				
5	14B–15377–00	GUIDE, INLET	1	1				
6	14B–15418–00	COVER, CHAIN CASE	1	1				
7	90110–06338	BOLT, HEXAGON SOCKET HEAD	3	3				
8	14B–15421–00	COVER, CRANKCASE 2	1	1				
9	5VY–15499–00	PROTECTOR, COVER	1	1				
10	90149–06152	SCREW	2	2				
11	3F9–15362–10	PLUG, OIL LEVEL	1	1				
12	93210–27778	O-RING	1	1				
13	14B–15461–00	GASKET, CRANKCASE COVER 2	1	1				
14	93610–20189	PIN, DOWEL	3	3				
15	90110–06323	BOLT, HEXAGON SOCKET HEAD	8	8				
16	90110–06324	BOLT, HEXAGON SOCKET HEAD	1	1				
17	14B–15416–00	COVER, OIL PUMP	1	1				
18	14B–15431–00	COVER, CRANKCASE 3	1	1				
19	93210–68001	O-RING	1	1				
20	90149–06152	SCREW	4	4				
21	90430–08143	GASKET	1	1				
22	92014–08016	BOLT, BUTTON HEAD	1	1				
23	14B–15456–00	GASKET, OIL PUMP COVER 1	1	1				
24	90110–06331	BOLT, HEXAGON SOCKET HEAD	5	5				
25	90110–06323	BOLT, HEXAGON SOCKET HEAD	1	1				
26	14B–11165–00	PLATE, BREATHER	1	1				
27	90149–06071	SCREW	4	4				

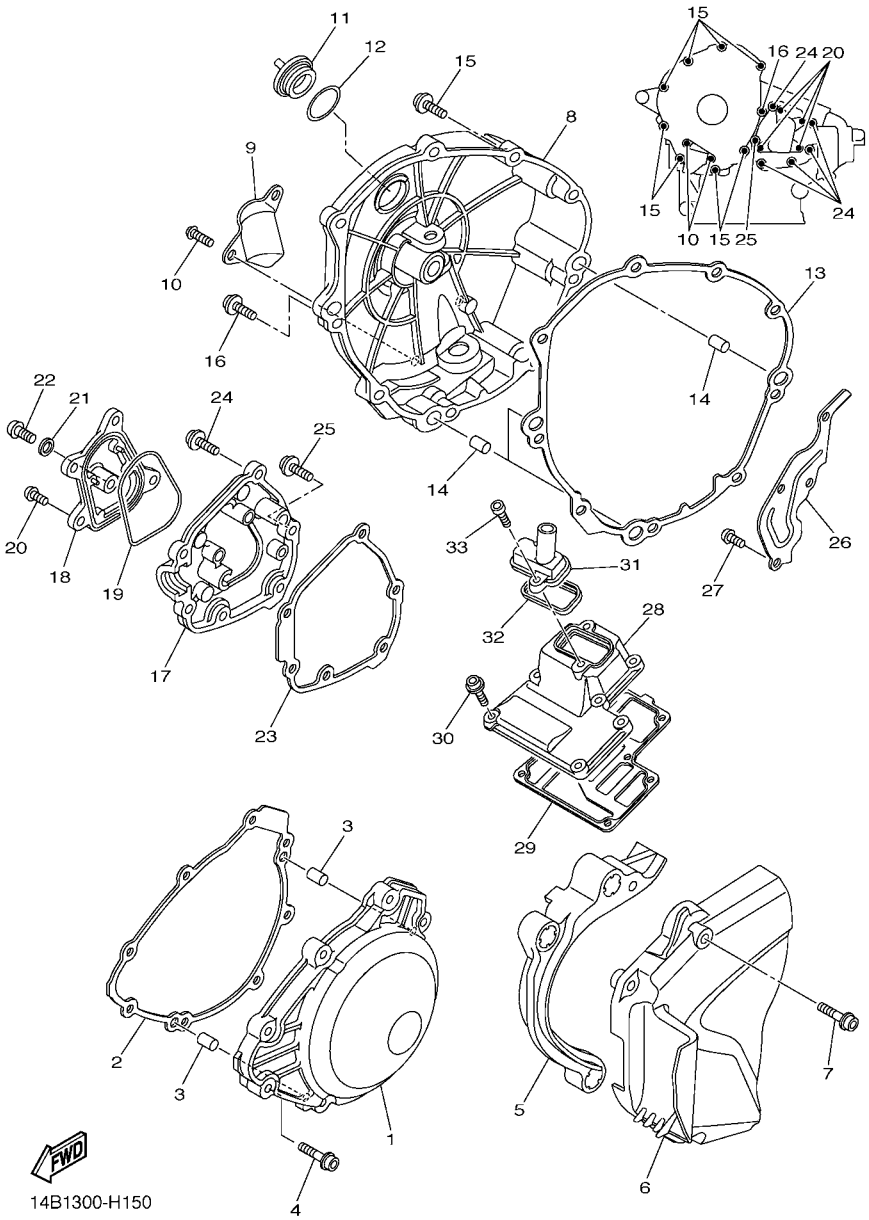

FIG. 15 CRANKCASE COVER 1

REF. NO.	PART NO.	DESCRIPTION	14BL	14BM				REMARKS
28	14B–15413–00	COVER	1	1				
29	14B–15462–00	GASKET, CRANKCASE COVER 3	1	1				
30	90110–06326	BOLT, HEXAGON SOCKET HEAD	6	6				
31	14B–15423–01	COVER 2	1	1				
32	14B–15379–00	SEAL, CRANKCASE	1	1				
33	90110–06178	BOLT, HEXAGON SOCKET HEAD	2	2				

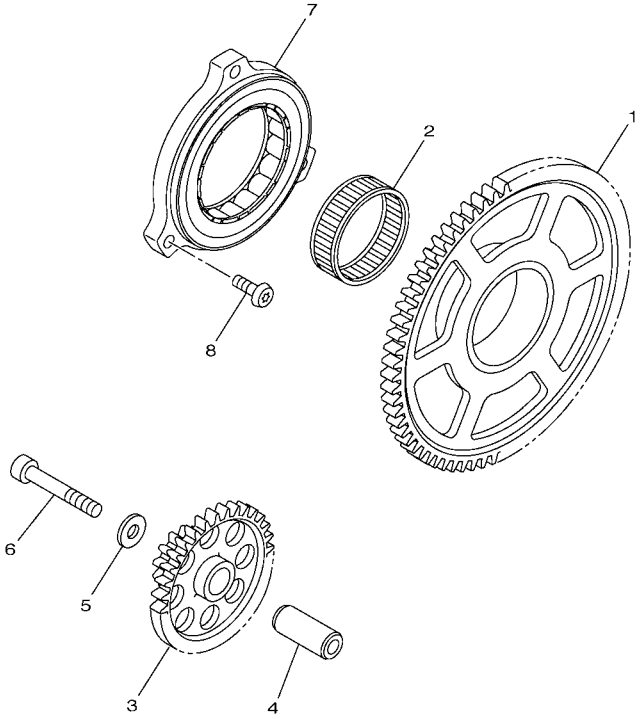

14B1300-H160

FIG. 16 STARTER

REF. NO.	PART NO.	DESCRIPTION	14BL	14BM				REMARKS
1	14B–15515–00	GEAR 3	1	1				
2	93310–24160	BEARING	1	1				
3	14B–15517–00	GEAR, IDLER 2	1	1				
4	14B–15521–00	SHAFT 1	1	1				
5	90201–06589	WASHER, PLATE	1	1				
6	90110–06223	BOLT, HEXAGON SOCKET HEAD	1	1				
7	14B–15570–00	STARTER CLUTCH ASSY	1	1				
8	90149–06158	SCREW	3	3				

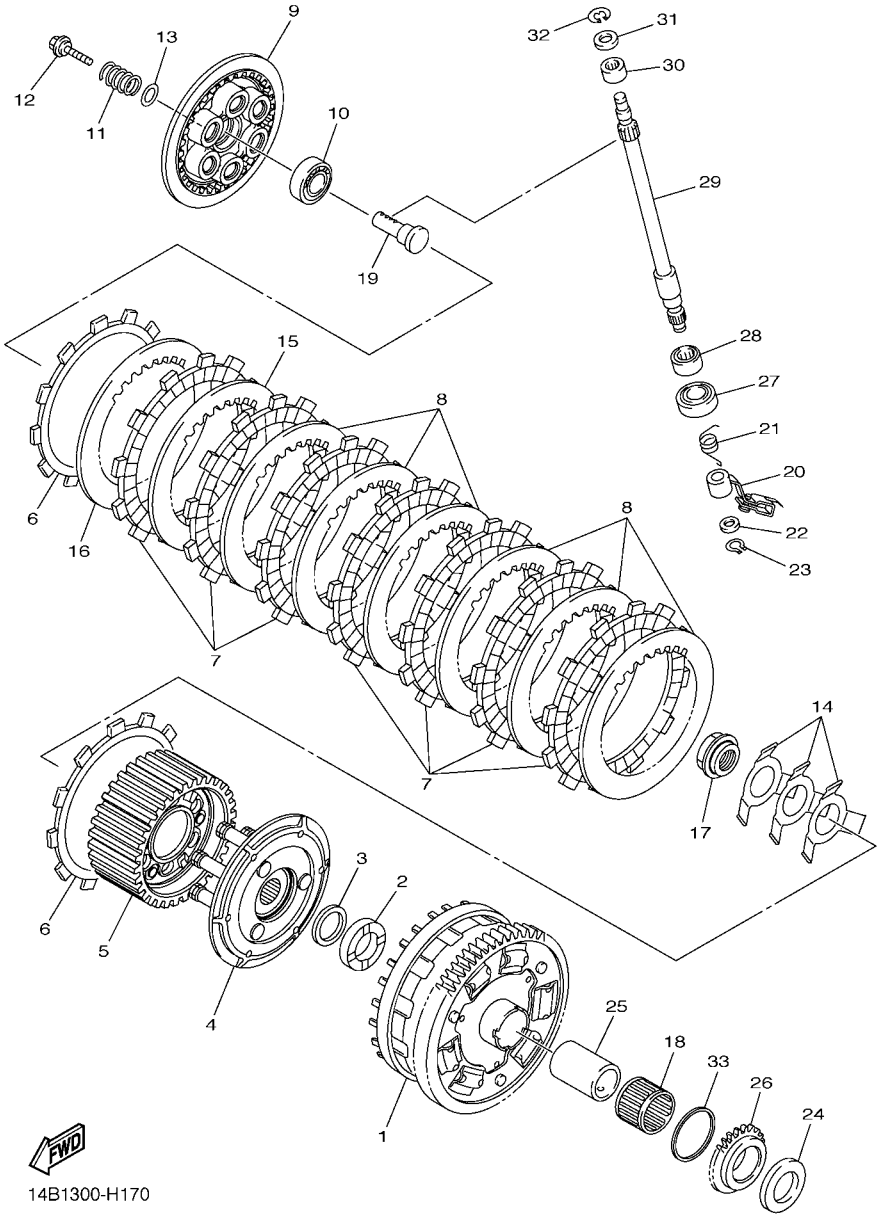

FIG. 17 CLUTCH

REF. NO.	PART NO.	DESCRIPTION	14BL	14BM				REMARKS
1	14B–16150–00	PRIMARY DRIVEN GEAR COMP.	1	1				
2	4C8–16154–00	PLATE, THRUST 1	1	1				
3	90208–25002	WASHER, CONICAL SPRING	1	1				
4	14B–16360–00	PRESSURE PLATE ASSY 2	1	1				
5	14B–16370–00	CLUTCH BOSS ASSY	1	1				
6	14B–16330–00	PLATE, FRICTION 2	2	2				
7	5VY–16321–00	PLATE, FRICTION	7	7				
8	5VY–16325–00	PLATE, CLUTCH 2	6	6				
9	14B–16351–00	PLATE, PRESSURE 1	1	1				
10	93306–00304	BEARING	1	1				
11	90501–240A2	SPRING, COMPRESSION	6	6				
12	90159–06026	SCREW, WITH WASHER	6	6				
13	14B–16384–00	PLATE, SEAT	6	6				
14	2S3–16539–00	SPRING	3	3				
15	5VY–16325–00	PLATE, CLUTCH 2	1	1				UR (T2.0)
	4B1–16325–00	PLATE, CLUTCH 2	1	1				UR (T2.3)
16	5VY–16325–00	PLATE, CLUTCH 2	1	1				UR (T2.0)
	4B1–16324–00	PLATE, CLUTCH 1	1	1				UR (T1.6)
	4B1–16325–00	PLATE, CLUTCH 2	1	1				UR (T2.3)
17	4C8–16377–00	NUT, LOCK	1	1				
18	93310–23168	BEARING	1	1				
19	4XV–16356–01	ROD, PUSH 1	1	1				
20	14B–16340–00	PUSH LEVER ASSY	1	1				
21	90508–16041	SPRING, TORSION	1	1				
22	90201–10029	WASHER, PLATE	1	1				
23	99009–10400	CIRCLIP	1	1				
24	363–16154–00	PLATE, THRUST 1	1	1				

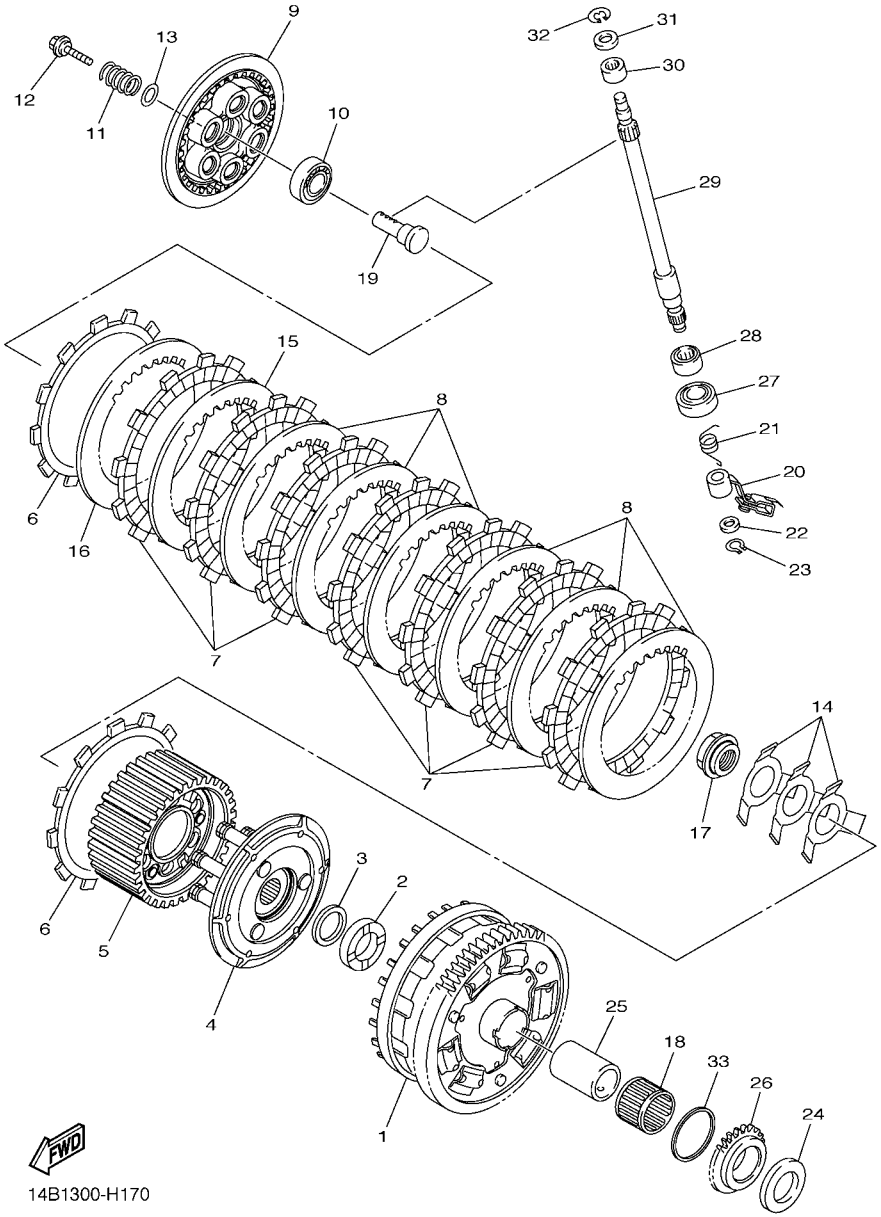

14B1300-H170

FIG. 17 CLUTCH

REF. NO.	PART NO.	DESCRIPTION	14BL	14BM				REMARKS
25	14B–16181–00	SPACER 1	1	1				
26	14B–13354–00	SPROCKET, DRIVE	1	1				
27	93102–15212	OIL SEAL	1	1				
28	93315–21570	BEARING	1	1				
29	5VY–16382–10	AXLE, PUSH LEVER	1	1				
30	93317–11096	BEARING	1	1				
31	92907–08600	WASHER, PLATE	1	1				
32	99001–07600	CIRCLIP	1	1				
33	90201–44008	WASHER, PLATE	1	1				

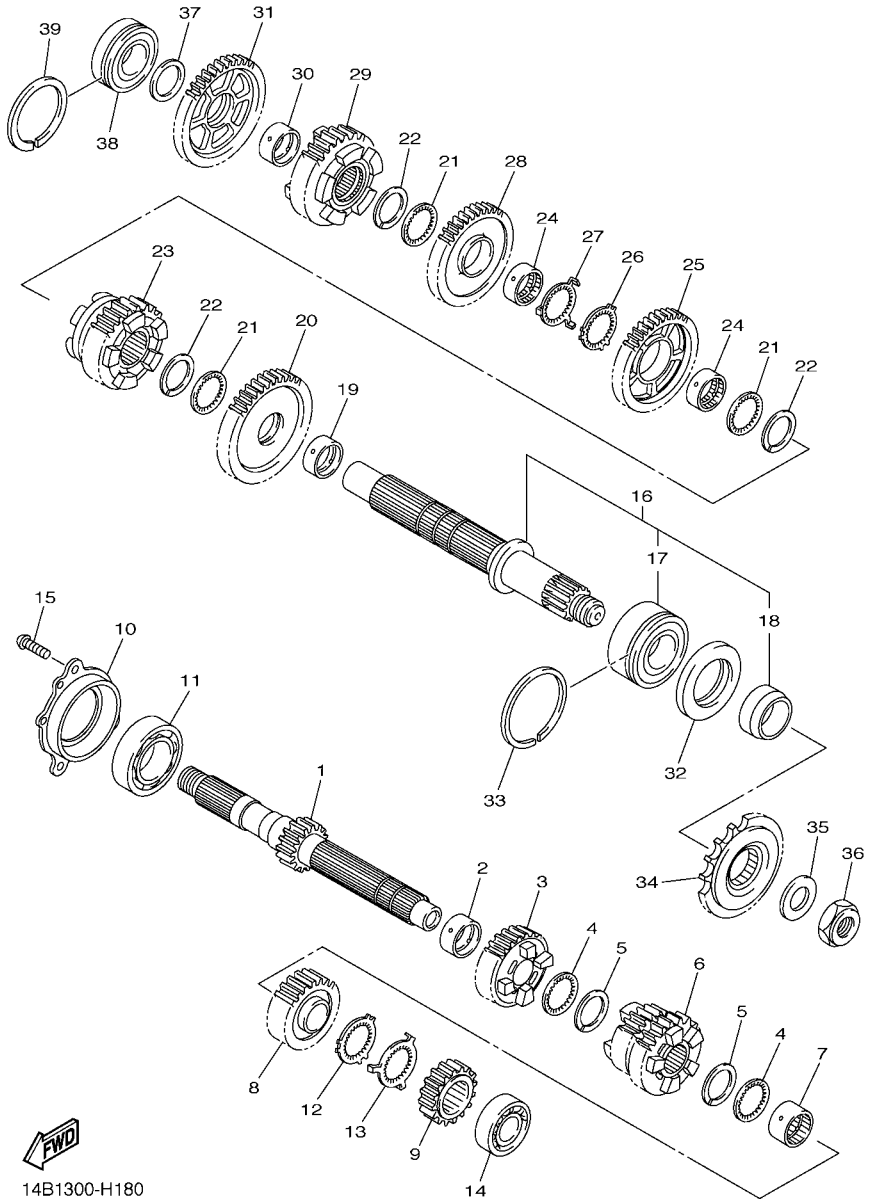

FIG. 18 TRANSMISSION

REF. NO.	PART NO.	DESCRIPTION	14BL	14BM				REMARKS
1	14B–17411–00	AXLE, MAIN (15T)	1	1				
2	90387–28003	COLLAR	1	1				
3	4C8–17151–00	GEAR, 5TH PINION (22T)	1	1				
4	90209–25011	WASHER	2	2				
5	93440–28184	CIRCLIP	2	2				
6	14B–17131–00	GEAR, 3RD PINION (21/23T)	1	1				
7	90387–25023	COLLAR	1	1				
8	14B–17161–00	GEAR, 6TH PINION (26T)	1	1				
9	2D1–17121–10	GEAR, 2ND PINION (16T)	1	1				
10	14B–15163–00	HOUSING, BEARING 1	1	1				
11	93306–20652	BEARING	1	1				
12	90214–25004	WASHER, CLAW	1	1				
13	90214–25003	WASHER, CLAW	1	1				
14	93306–27208	BEARING	1	1				
15	90149–06082	SCREW	3	3				
16	14B–17402–00	DRIVE AXLE ASSY	1	1				
17	93305–20605	.BEARING	1	1				
18	90387–30012	.COLLAR	1	1				
19	90387–31003	COLLAR	1	1				
20	14B–17221–00	GEAR, 2ND WHEEL (33T)	1	1				
21	90209–28008	WASHER	3	3				
22	93440–31187	CIRCLIP	3	3				
23	14B–17261–00	GEAR, 6TH WHEEL (33T)	1	1				
24	90387–28004	COLLAR	2	2				
25	14B–17241–00	GEAR, 4TH WHEEL (35T)	1	1				
26	90214–29002	WASHER, CLAW	1	1				
27	90214–28002	WASHER, CLAW	1	1				

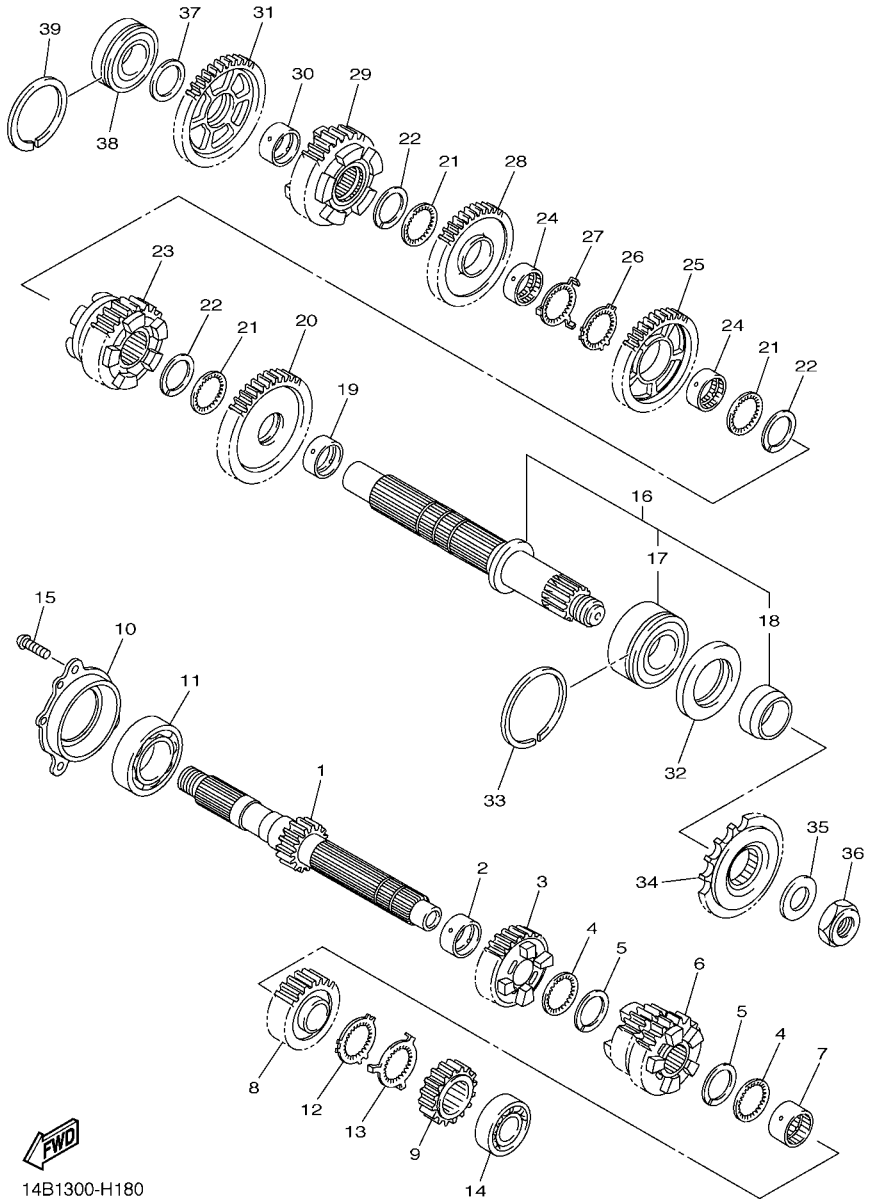

FIG. 18 TRANSMISSION

REF. NO.	PART NO.	DESCRIPTION	14BL	14BM				REMARKS
28	14B–17231–00	GEAR, 3RD WHEEL (37T)	1	1				
29	14B–17251–00	GEAR, 5TH WHEEL (30T)	1	1				
30	90387–25008	COLLAR	1	1				
31	5VY–17211–00	GEAR,1ST WHEEL (38T)	1	1				
32	93102–40330	OIL SEAL	1	1				
33	93440–62032	CIRCLIP	1	1				
34	4C8–17460–00	SPROCKET,DRIVE (17T)	1	1				
35	90201–22015	WASHER, PLATE	1	1				
36	90179–22019	NUT	1	1				
37	90201–257H0	WASHER, PLATE	1	1				
38	93306–205A2	BEARING	1	1				
39	93440–52009	CIRCLIP	1	1				

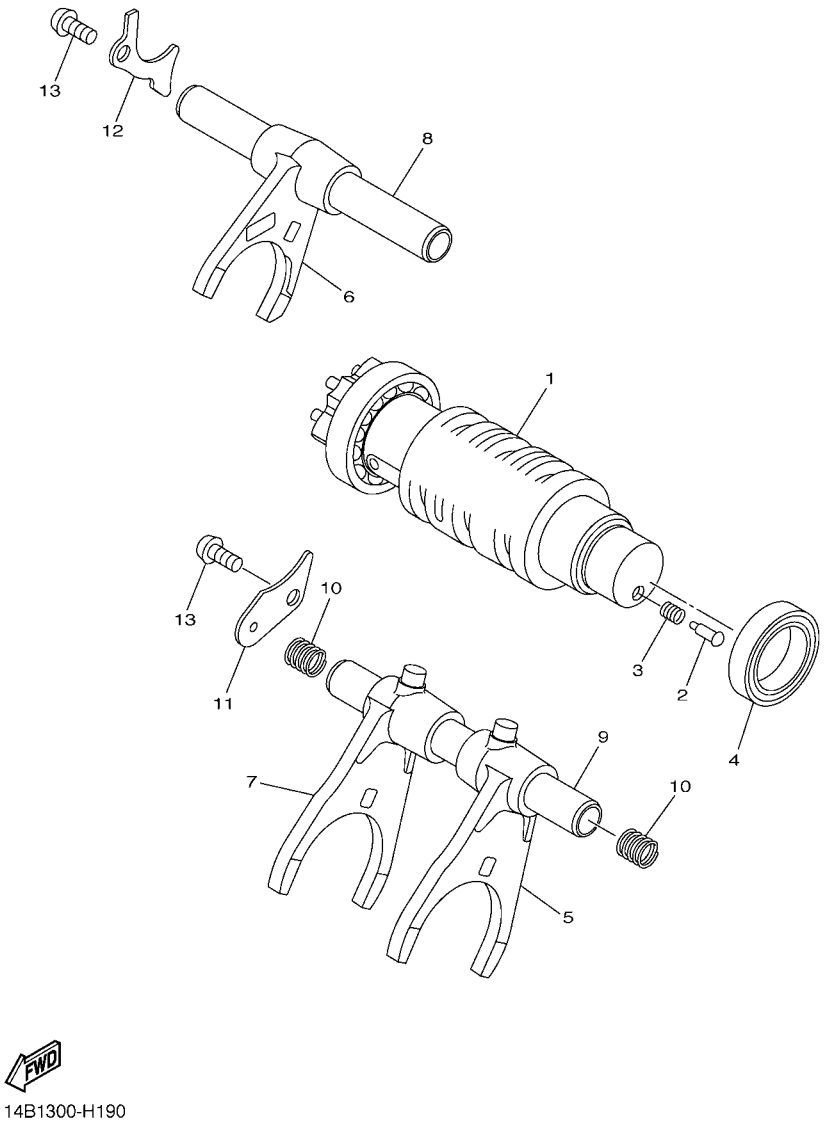

14B1300-H190

FIG. 19 SHIFT CAM & FORK

REF. NO.	PART NO.	DESCRIPTION	14BL	14BM				REMARKS
1	14B–18540–00	SHIFT CAM ASSY	1	1				
2	3D7–18542–00	POINT, NEUTRAL	1	1				
3	90501–06022	SPRING, COMPRESSION	1	1				
4	93306–80501	BEARING	1	1				
5	14B–18511–00	FORK, SHIFT 1	1	1				
6	14B–18512–00	FORK, SHIFT 2	1	1				
7	14B–18513–00	FORK, SHIFT 3	1	1				
8	14B–18531–00	BAR, SHIFT FORK GUIDE 1	1	1				
9	2C0–18535–00	BAR, SHIFT FORK GUIDE 2	1	1				
10	90501–080A2	SPRING, COMPRESSION	2	2				
11	14B–18536–00	STOPPER, SHIFT BAR	1	1				
12	14B–18562–00	PLATE, STOPPER 2	1	1				
13	90149–06071	SCREW	2	2				

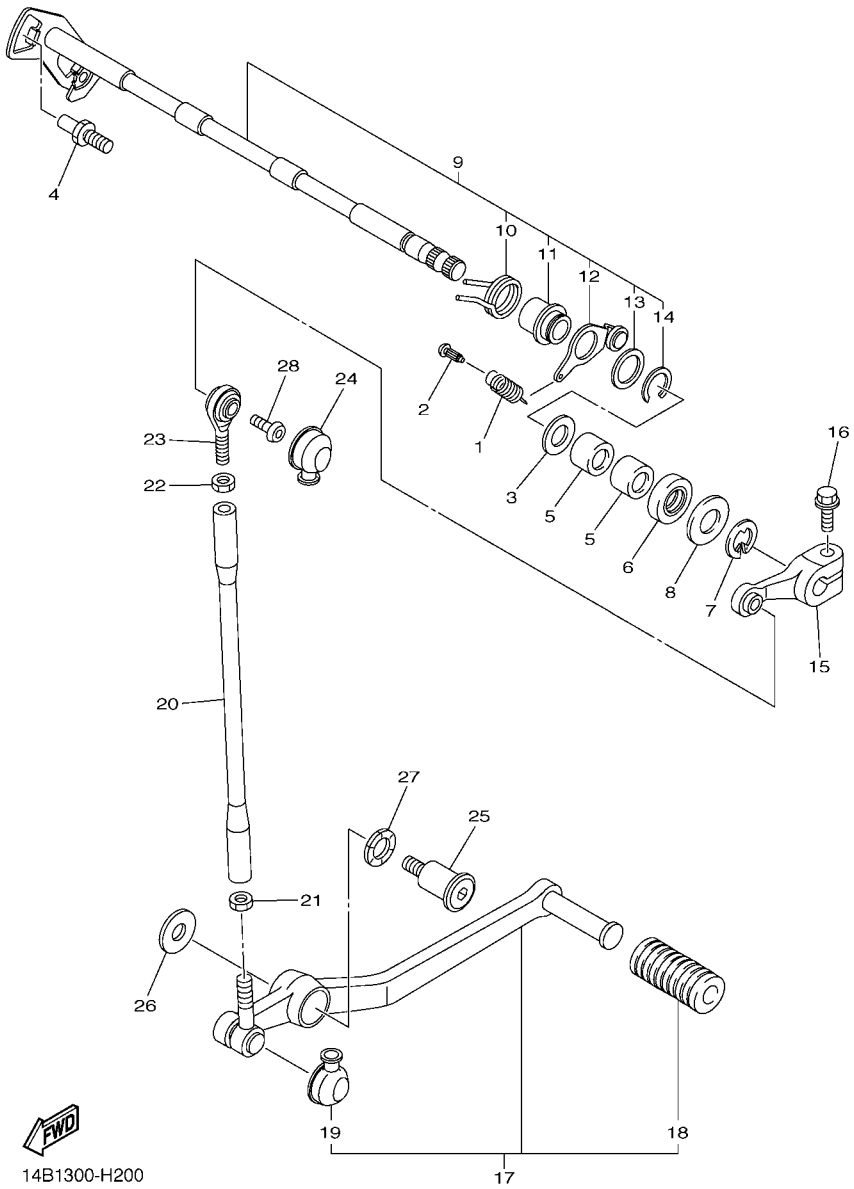

FIG. 20 SHIFT SHAFT

REF. NO.	PART NO.	DESCRIPTION	14BL	14BM				REMARKS
1	90506–18021	SPRING, TENSION	1	1				
2	132–16346–00	HOOK, SPRING	1	1				
3	90201–127E1	WASHER, PLATE	1	1				
4	1D7–18127–00	STOPPER, SCREW	1	1				
5	93317–11295	BEARING	2	2				
6	93102–12106	OIL SEAL (SD 12-22-5 HS)	1	1				
7	99002–10600	CLIP	1	1				
8	90201–12575	WASHER, PLATE	1	1				
9	14B–18101–00	SHIFT SHAFT ASSY	1	1				
10	90508–32020	.SPRING, TORSION	1	1				
11	2C0–18175–00	.SPACER	1	1				
12	14B–18140–00	.STOPPER LEVER ASSY	1	1				
13	90201–177G4	.WASHER, PLATE	1	1				
14	99009–17400	.CIRCLIP	1	1				
15	5JJ–18112–00	ARM, SHIFT	1	1				
16	95022–06020	BOLT, FLANGE	1	1				
17	14B–18110–00	SHIFT PEDAL ASSY	1	1				
18	5EB–18113–00	.COVER, SHIFT PEDAL	1	1				
19	4XV–18154–00	.COVER, DUST	1	1				
20	5LV–18115–00	ROD, SHIFT	1	1				
21	90170–06228	NUT(COUNTER CLOCKWISE)	1	1				
22	95304–06700	NUT	1	1				
23	5LV–18116–00	JOINT, ROD 1	1	1				
24	4XV–18154–00	COVER, DUST	1	1				
25	4C8–27434–00	BOLT	1	1				
26	90201–08103	WASHER, PLATE	1	1				
27	90206–14086	WASHER, WAVE	1	1				

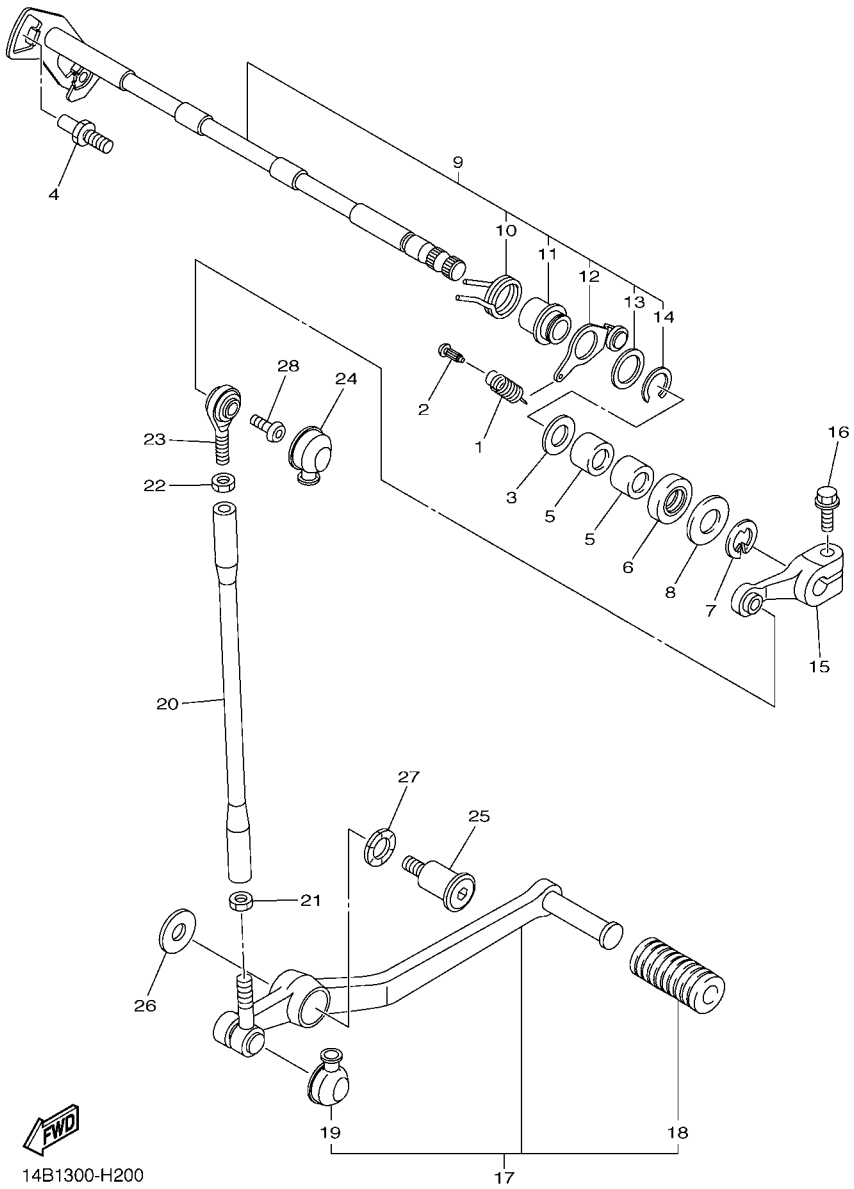

FIG. 20 SHIFT SHAFT

REF. NO.	PART NO.	DESCRIPTION	14BL	14BM				REMARKS
28	90111–06019	BOLT,HEX. SOCKET BUTTON	1	1				

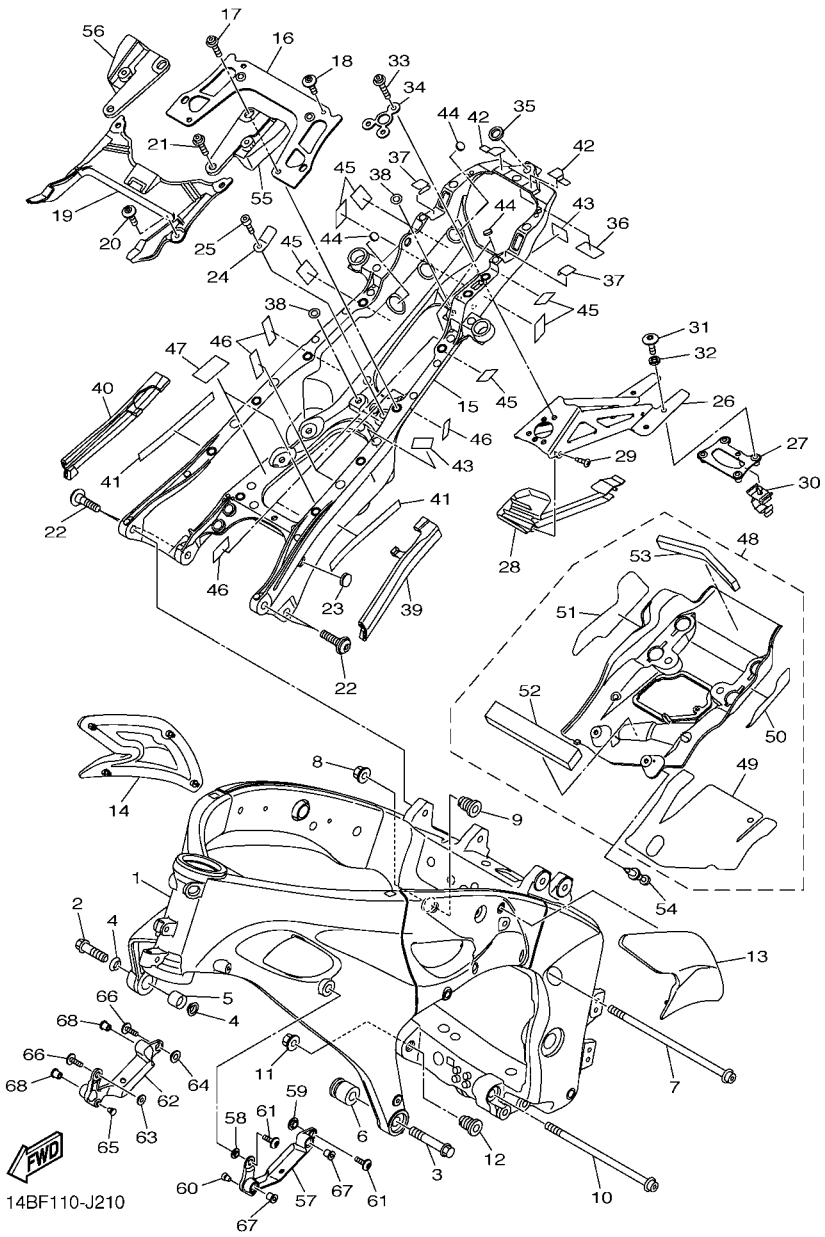

FIG. 21 FRAME

REF. NO.	PART NO.	DESCRIPTION	14BL	14BM				REMARKS
1	14B–21110–00	FRAME COMP.	1					
	14B–21110–20	FRAME COMP.		1				FOR CALIFORNIA
2	90105–12062	BOLT, FLANGE	1	1				
3	95817–12080	BOLT, FLANGE	1	1				
4	14B–21414–00	BOSS, ENGINE MOUNT	2	2				
5	14B–21424–00	BOSS, ENGINE MOUNT	1	1				
6	14B–2141R–00	BOSS	1	1				
7	90110–10005	BOLT, HEXAGON SOCKET HEAD	1	1				
8	90179–10028	NUT	1	1				
9	14B–21495–00	BOLT, ENGINE ADJUSTING	1	1				
10	90110–10023	BOLT, HEXAGON SOCKET HEAD	1	1				
11	90179–10028	NUT	1	1				
12	14B–21495–00	BOLT, ENGINE ADJUSTING	1	1				
13	14B–24121–00	SEAT, KNEE GRIP 1	1	1				
14	14B–24122–00	SEAT, KNEE GRIP 2	1	1				
15	14B–21190–00	REAR FRAME COMP.	1	1				
16	14B–21131–00	BRACKET	1	1				
17	90109–06015	BOLT	2	2				
18	90111–06051	BOLT,HEX. SOCKET BUTTON	2	2				
19	14B–21214–00	REINF., FRAME RR.	1	1				
20	90111–06051	BOLT,HEX. SOCKET BUTTON	2	2				
21	90109–06015	BOLT	2	2				
22	14B–2585H–09	SCREW,SET	4	4				
23	90338–15004	PLUG	1	1				
24	14B–2116B–00	BRKT.	1	1				
25	90110–06106	BOLT, HEXAGON SOCKET HEAD	1	1				
26	14B–21640–00	REAR STAY COMP.	1	1				

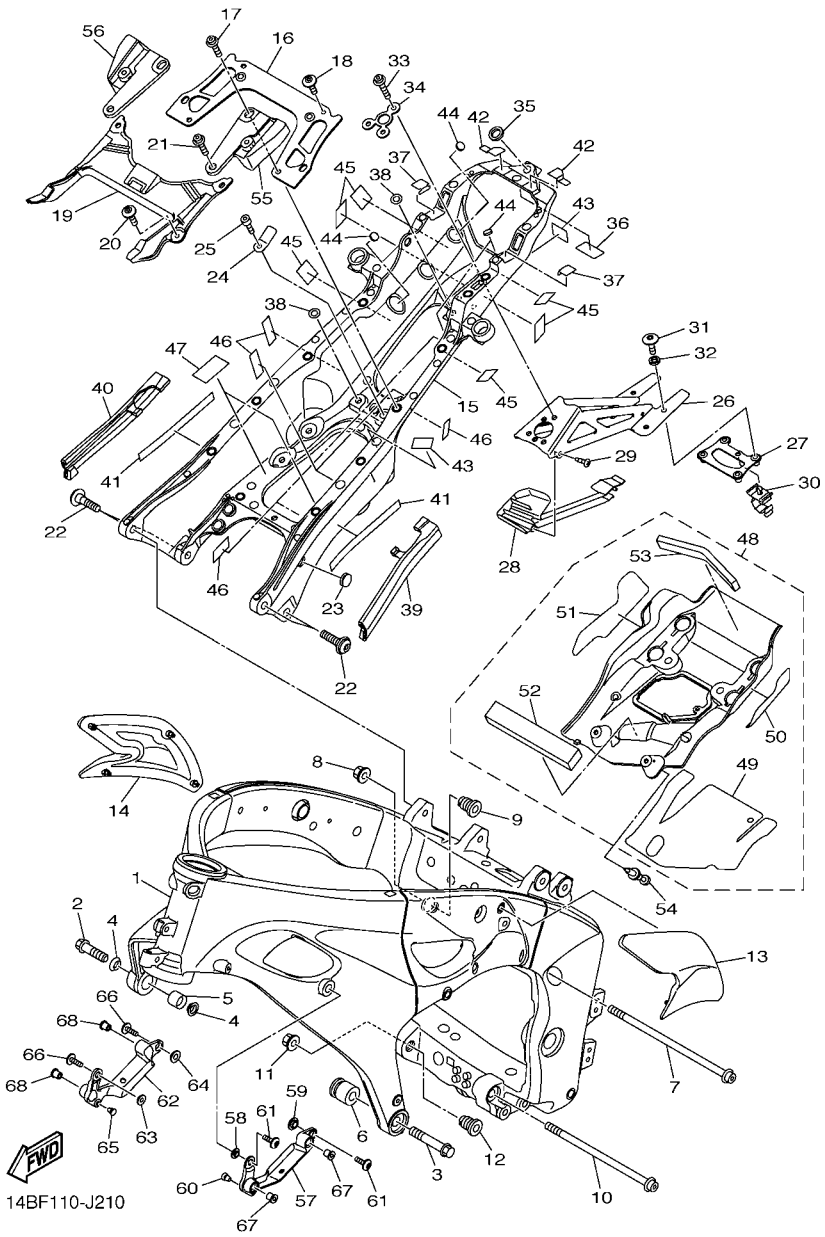

FIG. 21 FRAME

REF. NO.	PART NO.	DESCRIPTION	14BL	14BM				REMARKS
27	14B–21682–00	STAY, PLATE	1	1				
28	14B–2163A–00	COVER, REAR FENDER 1	1	1				
29	97702–50016	SCREW, TAPPING	1	1				
30	90464–14228	CLAMP	1	1				
31	90111–06129	BOLT,HEX. SOCKET BUTTON	4	4				
32	90387–061Y1	COLLAR	4	4				
33	90110–06156	BOLT, HEXAGON SOCKET HEAD	3	3				
34	14B–21615–00	WASHER, SPECIAL 1	1	1				
35	13S–21746–00	DAMPER	1	1				
36	14B–22873–00	SEAL 1	1	1				
37	14B–22874–00	SEAL 2	2	2				
38	13S–2173M–00	SEAL 3	2	2				
39	14B–22876–00	SEAL 4	1	1				
40	14B–22877–00	SEAL, 5	1	1				
41	13S–21567–00	TAPE, 2	2	2				
42	14B–22879–00	SEAL, 7	2	2				
43	14B–28425–00	DAMPER 3	2	2				
44	14B–28217–00	DAMPER 1	4	4				
45	14B–28227–00	DAMPER 2	6	6				
46	14B–28237–00	DAMPER 3	7	7				
47	14B–28435–00	DAMPER 4	2	2				
48	14B–2110N–20	COVER ASSY 2	1	1				
49	14B–2112B–00	.SEAT 1	1	1				
50	14B–2113C–00	.SHEET,2	1	1				
51	14B–2113D–00	.SHEET, 3	1	1				
52	90520–15001	.DAMPER, PLATE	1	1				
53	90520–15004	.DAMPER, PLATE	1	1				

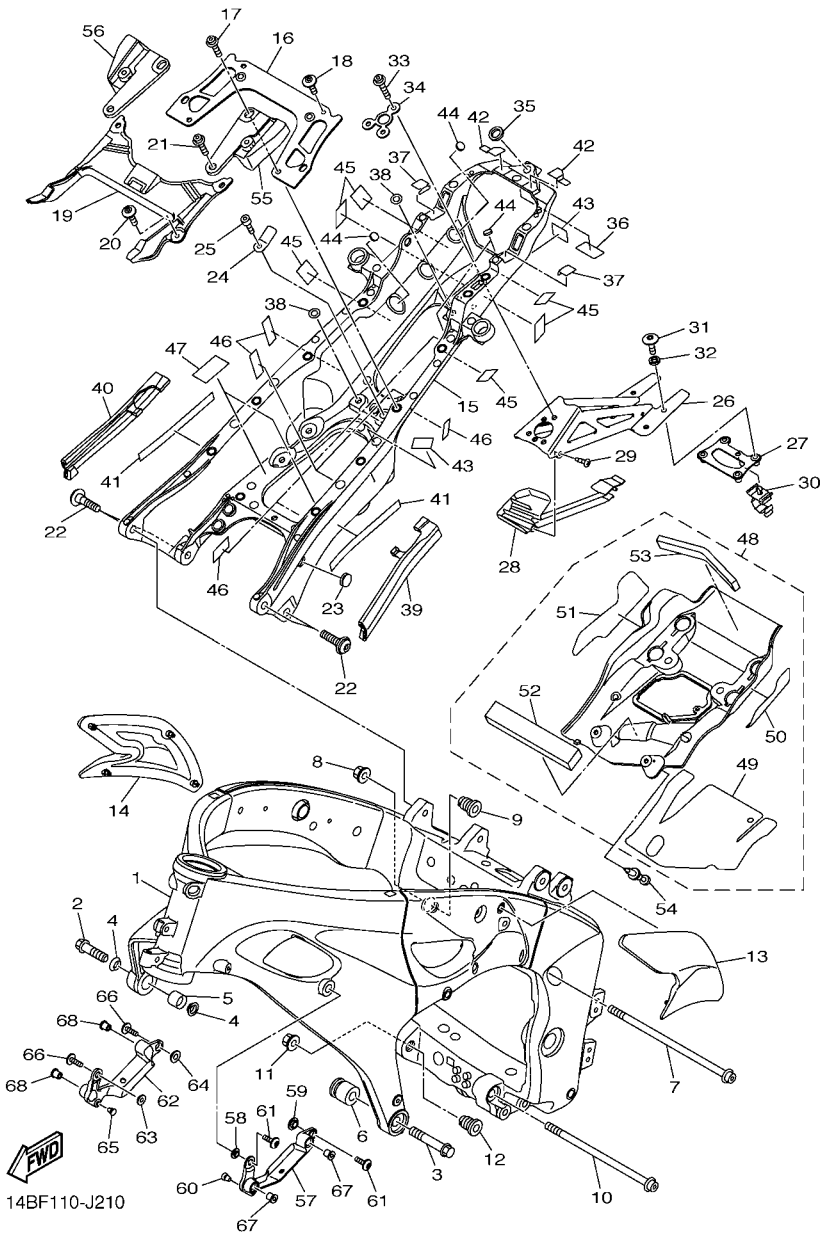

FIG. 21 FRAME

REF. NO.	PART NO.	DESCRIPTION	14BL	14BM				REMARKS
54	90269–06016	RIVET	2	2				
55	14B–2172E–00	STAY, SIDE COVER 1	1	1				
56	14B–2174E–00	STAY, SIDE COVER 2	1	1				
57	14B–2836F–00	BRACKET 3	1	1				
58	90387–06217	COLLAR	1	1				
59	90560–08251	SPACER	1	1				
60	90338–06018	PLUG	1	1				
61	90111–06051	BOLT,HEX. SOCKET BUTTON	2	2				
62	14B–2836G–00	BRACKET 4	1	1				
63	90387–06217	COLLAR	1	1				
64	90560–08251	SPACER	1	1				
65	90338–06018	PLUG	1	1				
66	90111–06051	BOLT,HEX. SOCKET BUTTON	2	2				
67	90179–05523	NUT	2	2				
68	90179–05523	NUT	2	2				

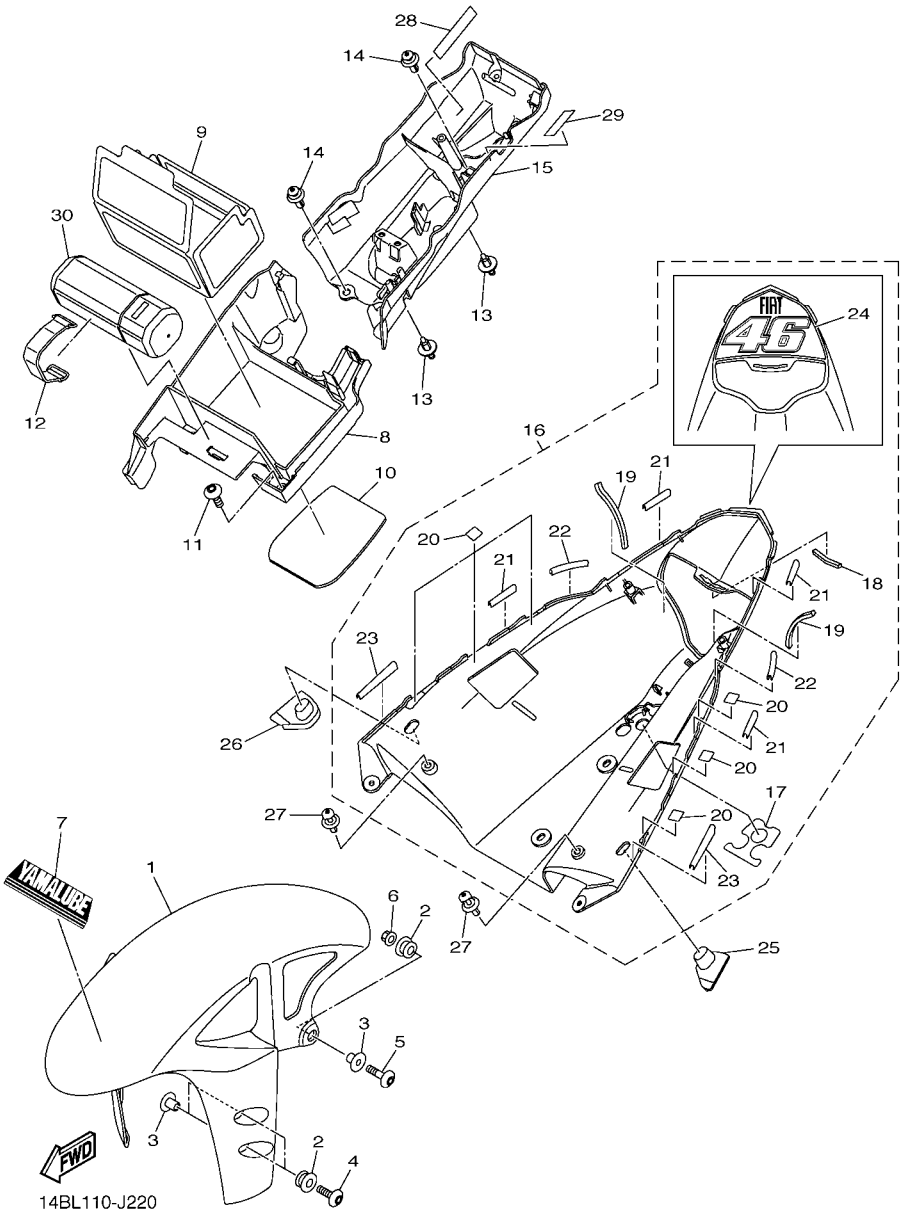

FIG. 22 FENDER

REF. NO.	PART NO.	DESCRIPTION	14BL	14BM				REMARKS
1	14B–21511–00–P2	FENDER, FRONT	1	1				DPBMC
2	90480–12072	GROMMET	6	6				
3	90387–065J6	COLLAR	6	6				
4	90111–06043	BOLT,HEX. SOCKET BUTTON	4	4				
5	90111–06030	BOLT,HEX. SOCKET BUTTON	2	2				
6	95702–06500	NUT, FLANGE	2	2				
7	14B–21578–00	EMBLEM	1	1				
8	14B–8212B–00	BOX, BATTERY 1	1	1				
9	14B–82122–00	SEAT, BATTERY	1	1				
10	14B–82176–00	DAMPER	1	1				
11	90149–06302	SCREW	2	2				
12	5JJ–82131–00	BAND, BATTERY	1	1				
13	90269–07077	RIVET	2	2				
14	90269–07012	RIVET	2	2				
15	14B–8212C–00	BOX, BATTERY 2	1	1				
16	14B–Y2161–00–P1	REAR FENDER COMP.	1	1				BWC1
17	14B–21669–00	.SEAL	1	1				
18	4GY–2174X–00	.DAMPER	1	1				
19	3CV–28372–00	.DAMPER	2	2				
20	4C8–21735–00	.SEAL 2	6	6				
21	5VY–21732–00	.SEAL 1	4	4				
22	5PW–21732–00	.SEAL 1	2	2				
23	14B–21732–00	.SEAL 1	2	2				
24	14B–21737–00	.EMBLEM	1	1				
25	14B–21639–00	DAMPER 2	1	1				
26	14B–21649–00	DAMPER	1	1				
27	90269–07076	RIVET	2	2				

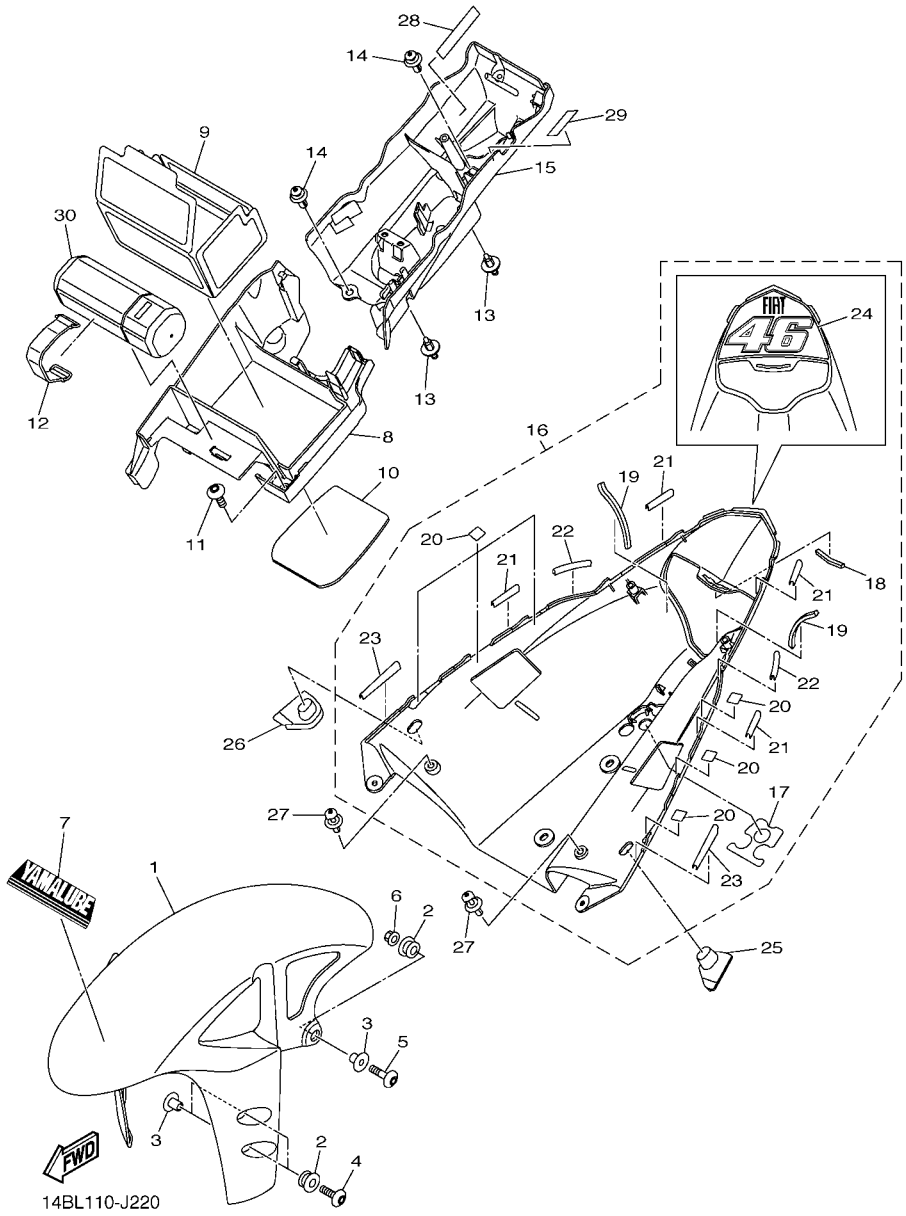

FIG. 22 FENDER

REF. NO.	PART NO.	DESCRIPTION	14BL	14BM				REMARKS
28	3JJ–28446–A1	LABEL, CAUTION	1	1				
29	4BR–24877–A0	LABEL, CAUTION	1	1				
30	14B–28100–00	TOOL KIT	1	1				

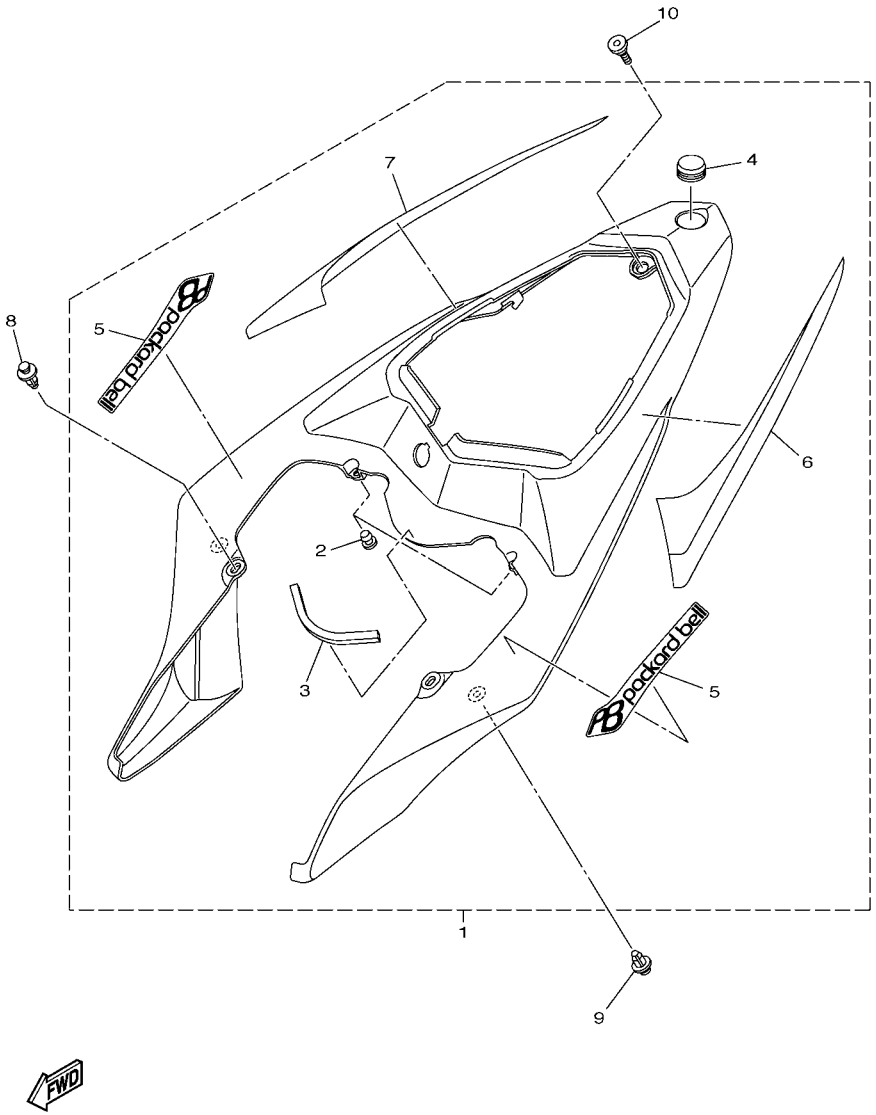

FIG. 23 SIDE COVER

REF. NO.	PART NO.	DESCRIPTION	14BL	14BM				REMARKS
1	14B–Y2171–10–P0	COVER, SIDE 1	1	1				BWC1
2	90338–06018	.PLUG	2	2				
3	4C8–21747–00	.DAMPER	1	1				
4	4KN–2836B–20	.TUNING FORK MARK	1	1				
5	14B–21781–00	.EMBLEM 1	2	2				
6	14B–21788–00	.GRAPHIC	1	1				
7	14B–21789–00	.GRAPHIC	1	1				
8	90269–06081	RIVET	2	2				
9	90269–06001	RIVET	2	2				
10	90109–06248	BOLT	1	1				

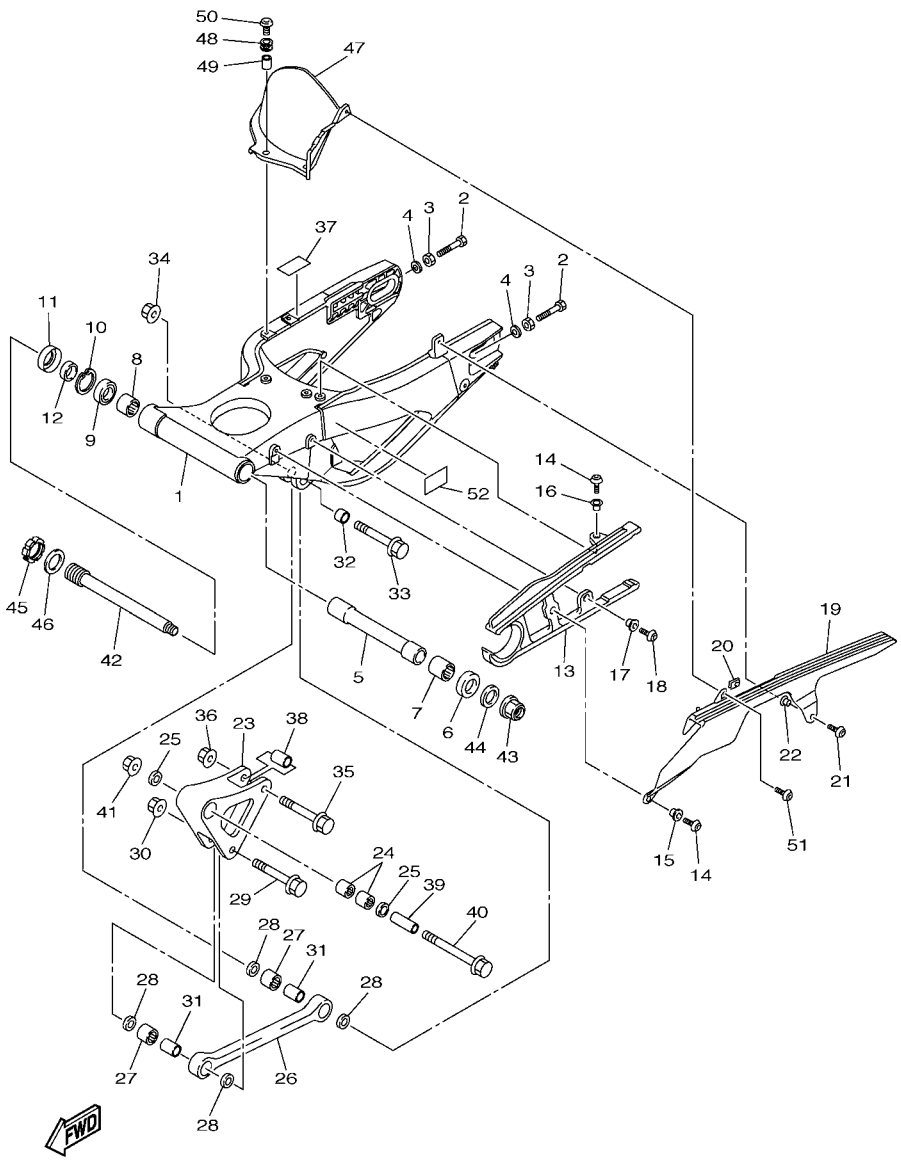

14B1300-H240

FIG. 24 REAR ARM

REF. NO.	PART NO.	DESCRIPTION	14BL	14BM				REMARKS
1	14B–22110–00–P0	REAR ARM COMP.	1	1				MBL2
2	90101–08013	BOLT	2	2				
3	95302–08600	NUT	2	2				
4	90201–08057	WASHER, PLATE	2	2				
5	14B–22184–00	BUSH	1	1				
6	5VY–22128–00	COVER, THRUST 1	1	1				
7	93317–52897	BEARING	1	1				
8	93317–428U8	BEARING	1	1				
9	93306–97202	BEARING	1	1				
10	99009–42500	CIRCLIP	1	1				
11	93106–28004	OIL SEAL	1	1				
12	90387–22023	COLLAR	1	1				
13	14B–22151–00	SEAL, GUARD	1	1				
14	92012–06016	BOLT, BUTTON HEAD	2	2				
15	90387–062X0	COLLAR	1	1				
16	90387–06066	COLLAR	1	1				
17	90387–06066	COLLAR	1	1				
18	92012–06016	BOLT, BUTTON HEAD	1	1				
19	14B–22311–00	CASE, CHAIN	1	1				
20	90183–05076	NUT, SPRING	1	1				
21	90149–06298	SCREW	1	1				
22	90387–07717	COLLAR	1	1				
23	14B–2217A–00	ARM, RELAY	1	1				
24	93315–31758	BEARING	2	2				
25	93109–17071	OIL SEAL	2	2				
26	14B–2217M–00	ARM 1	1	1				
27	93315–31758	BEARING	2	2				

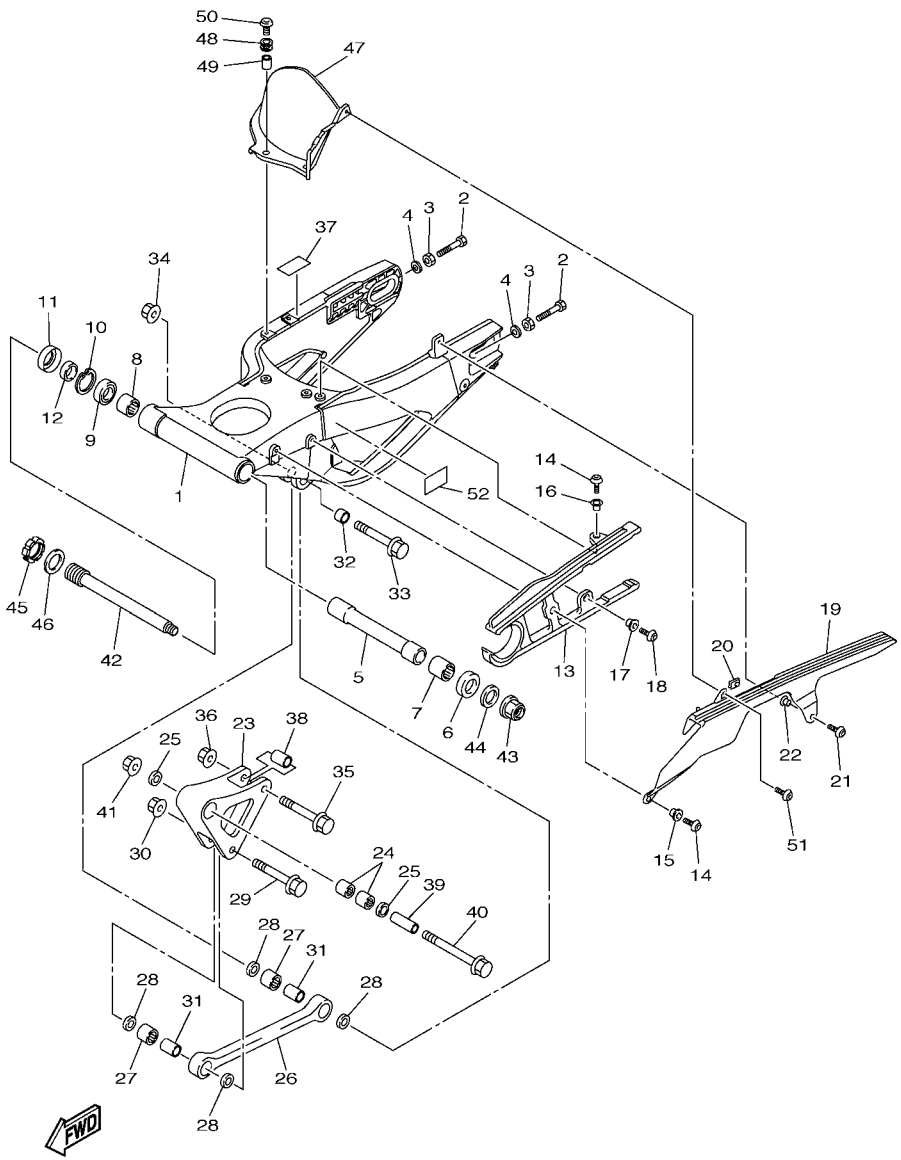

14B1300-H240

FIG. 24 REAR ARM

REF. NO.	PART NO.	DESCRIPTION	14BL	14BM				REMARKS
28	93109–17071	OIL SEAL	4	4				
29	90105–10017	BOLT, FLANGE	1	1				
30	95602–10200	NUT, U FLANGE	1	1				
31	90387–1012A	COLLAR	2	2				
32	90387–1013U	COLLAR	1	1				
33	90105–10018	BOLT, FLANGE	1	1				
34	95602–10200	NUT, U FLANGE	1	1				
35	90105–10017	BOLT, FLANGE	1	1				
36	95602–10200	NUT, U FLANGE	1	1				
37	2C0–21566–00	TAPE, 1	1	1				
38	90387–1012A	COLLAR	1	1				
39	90387–10034	COLLAR	1	1				
40	90105–10150	BOLT, FLANGE	1	1				
41	95602–10200	NUT, U FLANGE	1	1				
42	14B–22141–00	SHAFT, PIVOT	1	1				
43	90185–20008	NUT, SELF-LOCKING	1	1				
44	90201–20026	WASHER, PLATE	1	1				
45	4C8–22252–00	NUT	1	1				
46	90201–30016	WASHER, PLATE	1	1				
47	14B–21650–00	REAR FENDER COMP.	1	1				
48	90480–12005	GROMMET	3	3				
49	90387–06057	COLLAR	3	3				
50	90149–06302	SCREW	3	3				
51	90111–05002	BOLT,HEX. SOCKET BUTTON	1	1				
52	14B–21668–00	LABEL, TIRE	1	1				

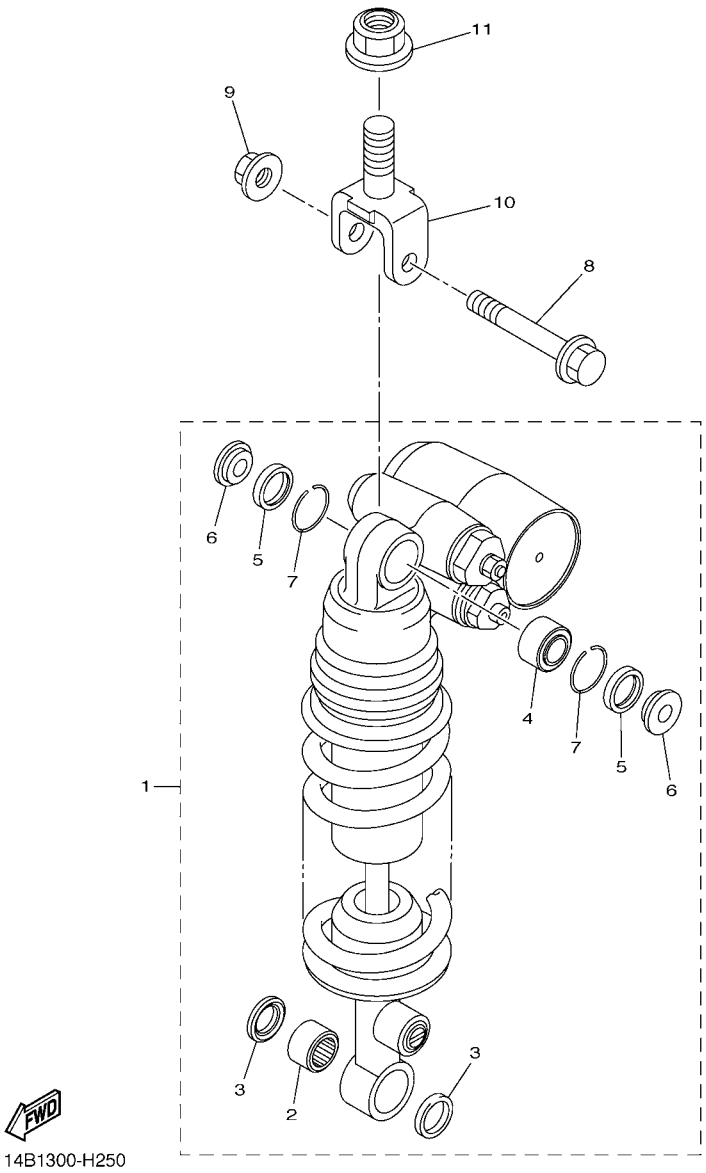

FIG. 25 REAR SUSPENSION

REF. NO.	PART NO.	DESCRIPTION	14BL	14BM				REMARKS
1	14B–22210–10	SHOCK ABSORBER ASSY, REAR	1	1				
2	93315–31758	.BEARING	1	1				
3	93109–17071	.OIL SEAL	2	2				
4	93399–999T4	.BEARING	1	1				
5	93101–18061	.OIL SEAL	2	2				
6	14B–22253–00	.COLLAR, DISTANCE	2	2				
7	93440–30113	.CIRCLIP	2	2				
8	90105–10020	BOLT, FLANGE	1	1				
9	95602–10200	NUT, U FLANGE	1	1				
10	14B–22219–00	BRACKET, UPPER	1	1				
11	95602–16200	NUT, SELF-LOCKING	1	1				

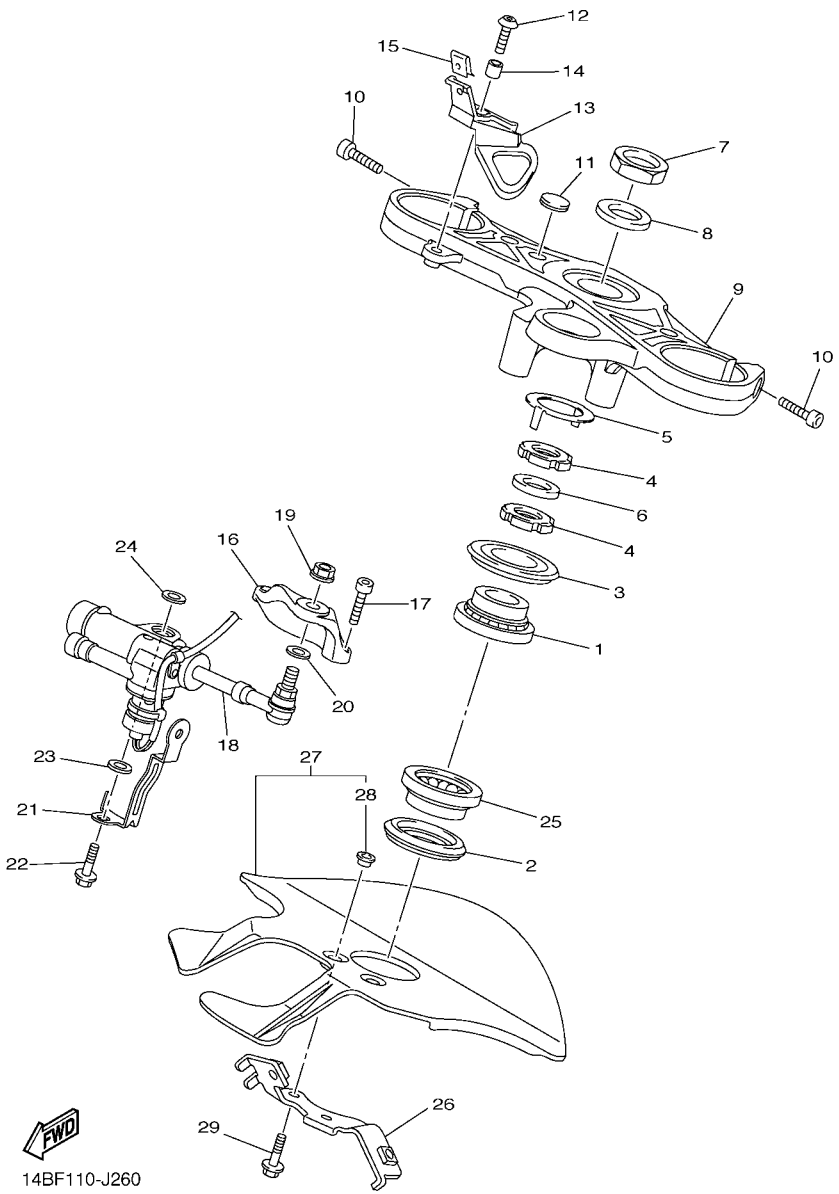

FIG. 26 STEERING

REF. NO.	PART NO.	DESCRIPTION	14BL	14BM				REMARKS
1	93399–99932	BEARING	1	1				
2	3FV–23462–00	SEAL, STEERING	1	1				
3	4XV–23415–01	COVER, BALL RACE 1	1	1				
4	90179–30691	NUT	2	2				
5	4XV–23418–00	WASHER, SPECIAL	1	1				
6	90202–30235	WASHER, PLATE	1	1				
7	90170–28419	NUT	1	1				
8	90201–281U8	WASHER, PLATE	1	1				
9	14B–23435–10	CROWN, HANDLE	1	1				
10	91314–08030	BOLT, HEXAGON SOCKET HEAD	2	2				
11	14B–2836B–00	TUNING FORK MARK	1	1				
12	90111–06041	BOLT,HEX. SOCKET BUTTON	1	1				
13	5VY–26292–11	STAY	1	1				
14	90387–06057	COLLAR	1	1				
15	90183–050A0	NUT, SPRING	1	1				
16	14B–23495–00	STAY, DAMPER	1	1				
17	90110–06175	BOLT, HEXAGON SOCKET HEAD	2	2				
18	14B–23490–00	HANDLEBAR SHIMMY DAMPER ASSY	1	1				
19	95602–08200	NUT, SELF-LOCKING	1	1				
20	90201–08M09	WASHER, PLATE	1	1				
21	45B–2331E–00	GUIDE, CABLE	1	1				
22	90105–08108	BOLT, FLANGE	1	1				
23	90201–08676	WASHER, PLATE	1	1				
24	5VY–26398–00	WASHER	1	1				
25	93399–99957	BEARING	1	1				
26	14B–23377–00	BRACKET, HORN	1	1				
27	14B–23808–00	STRG, COVER. ASSY	1	1				

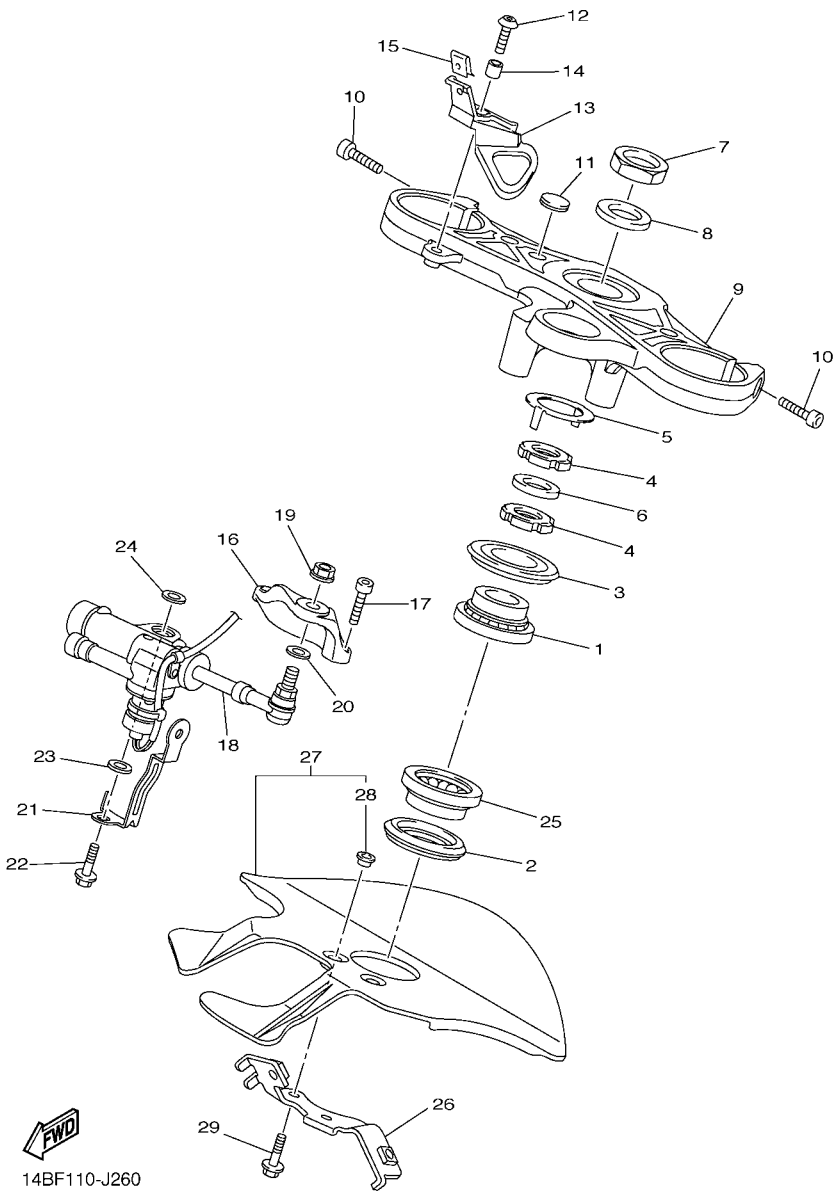

FIG. 26 STEERING

REF. NO.	PART NO.	DESCRIPTION	14BL	14BM				REMARKS
28	90560–06244	.SPACER	2	2				
29	90105–06557	BOLT, FLANGE	2	2				

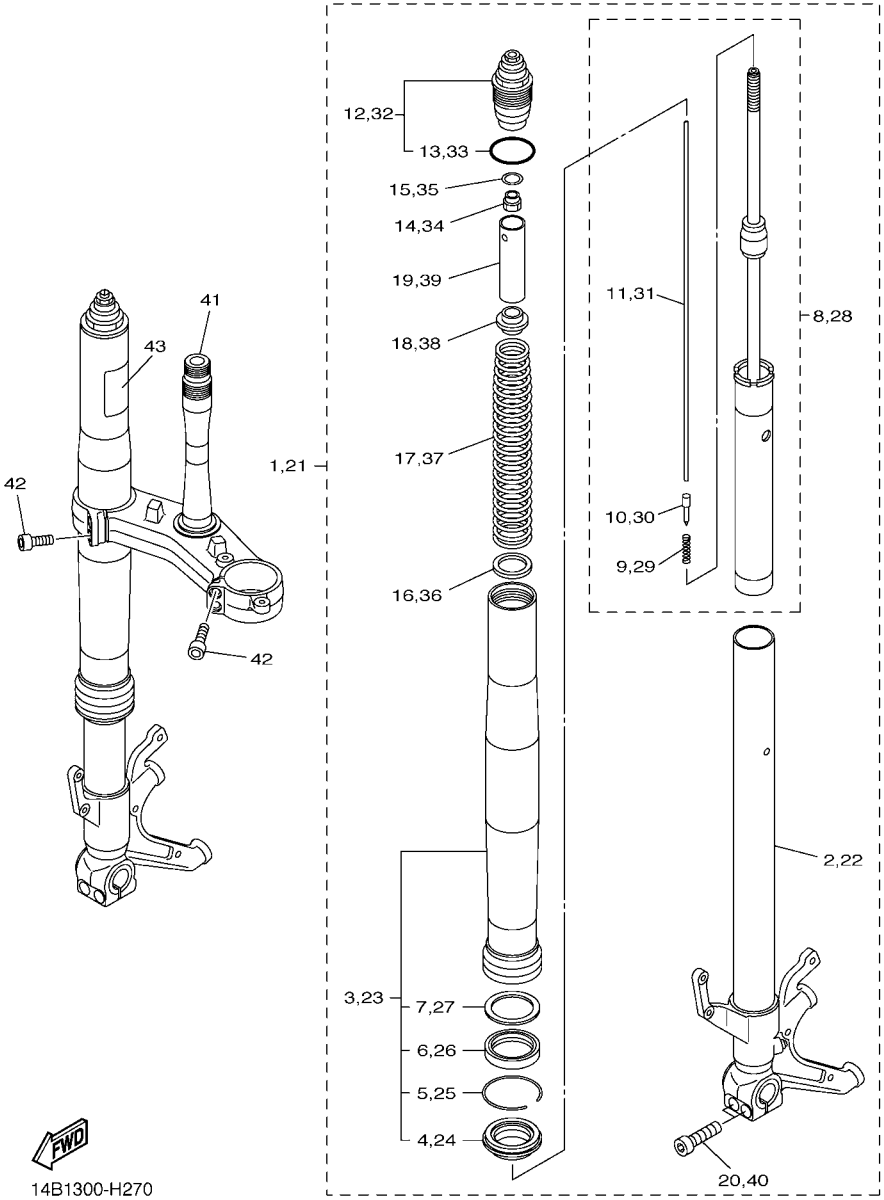

FIG. 27 FRONT FORK

REF. NO.	PART NO.	DESCRIPTION	14BL	14BM				REMARKS
1	14B–23102–00	FRONT FORK ASSY (L.H)	1	1				
2	14B–23110–00	.INNER TUBE COMP.1	1	1				
3	14B–23106–00	.OUTER TUBE COMP.	1	1				
4	4TX–23144–01	..SEAL, DUST	1	1				
5	4TX–23156–00	..RING, SNAP	1	1				
6	5VX–23145–00	..OIL SEAL	1	1				
7	4TX–23115–00	..GUIDE, COVER UPPER	1	1				
8	14B–2315K–00	.CYL. COMP.,2	1	1				
9	14B–2319M–00	..SPRING, VALVE	1	1				
10	14B–23109–00	..VALVE	1	1				
11	14B–2318Y–00	..PLUNGER	1	1				
12	14B–23111–00	.BOLT, CAP	1	1				
13	93210–41N50	..O-RING	1	1				
14	13S–23393–00	.NUT, SPECIAL	1	1				
15	13S–2332N–00	.PLATE, VALVE 2	1	1				
16	5YU–23143–00	.SEAT, SPRING LOWER	1	1				
17	14B–23141–00	.SPRING, FRONT FORK	1	1				
18	13S–23142–00	.SEAT, SPRING UPPER	1	1				
19	14B–23118–00	.SPACER	1	1				
20	91314–08035	.BOLT, HEXAGON SOCKET HEAD	2	2				
21	14B–23103–00	FRONT FORK ASSY (R.H)	1	1				
22	14B–23120–00	.INNER TUBE COMP.2	1	1				
23	14B–23106–00	.OUTER TUBE COMP.	1	1				
24	4TX–23144–01	..SEAL, DUST	1	1				
25	4TX–23156–00	..RING, SNAP	1	1				
26	5VX–23145–00	..OIL SEAL	1	1				
27	4TX–23115–00	..GUIDE, COVER UPPER	1	1				

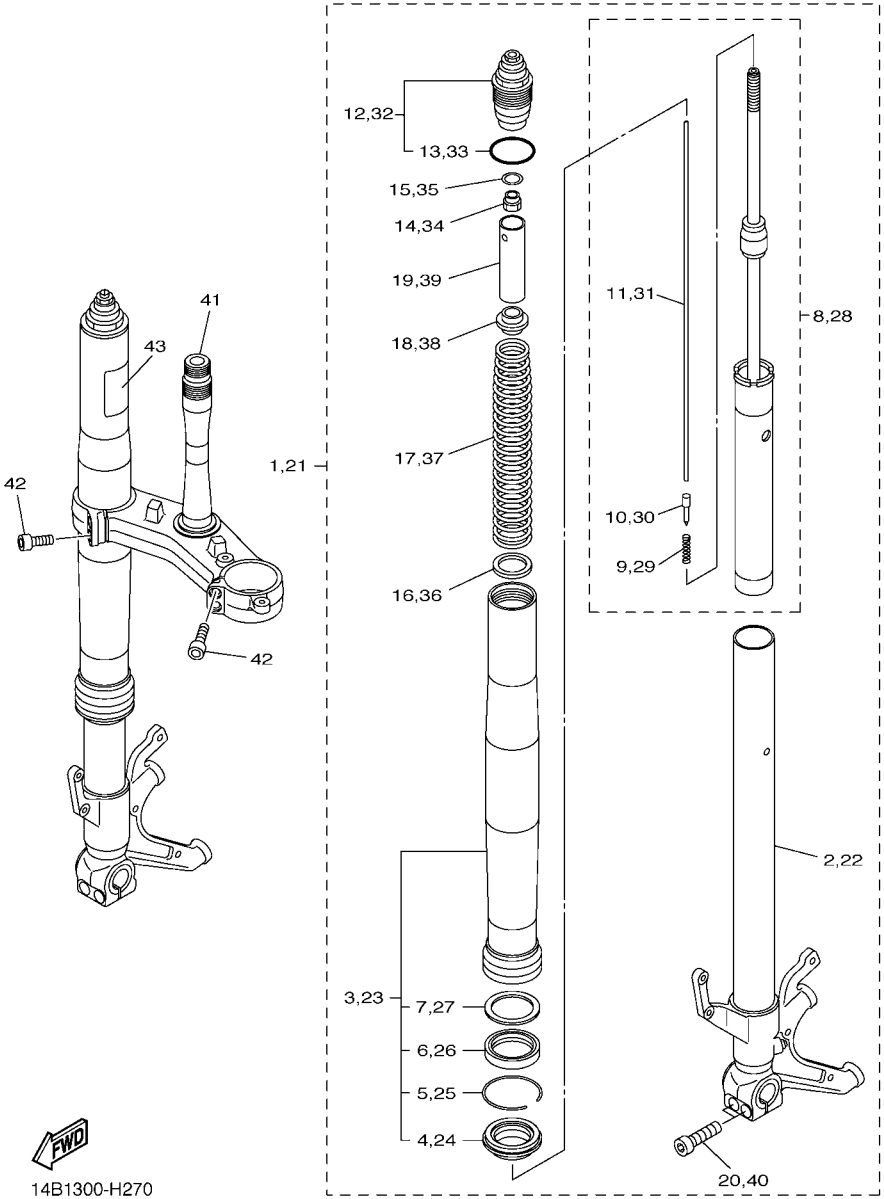

FIG. 27 FRONT FORK

REF. NO.	PART NO.	DESCRIPTION	14BL	14BM				REMARKS
28	14B–2315L–00	.CYL. COMP.,3	1	1				
29	14B–2319M–00	..SPRING, VALVE	1	1				
30	14B–23109–00	..VALVE	1	1				
31	14B–2318Y–00	..PLUNGER	1	1				
32	14B–2311J–00	.BOLT, CAP 2	1	1				
33	93210–41N50	..O-RING	1	1				
34	13S–23393–00	.NUT, SPECIAL	1	1				
35	13S–2332N–00	.PLATE, VALVE 2	1	1				
36	5YU–23143–00	.SEAT, SPRING LOWER	1	1				
37	14B–23141–00	.SPRING, FRONT FORK	1	1				
38	13S–23142–00	.SEAT, SPRING UPPER	1	1				
39	14B–23118–00	.SPACER	1	1				
40	91314–08035	.BOLT, HEXAGON SOCKET HEAD	2	2				
41	14B–23340–00	UNDER BRACKET COMP.	1	1				
42	91314–08030	BOLT, HEXAGON SOCKET HEAD	4	4				
43	5PW–23472–00	PROTECTOR	1	1				

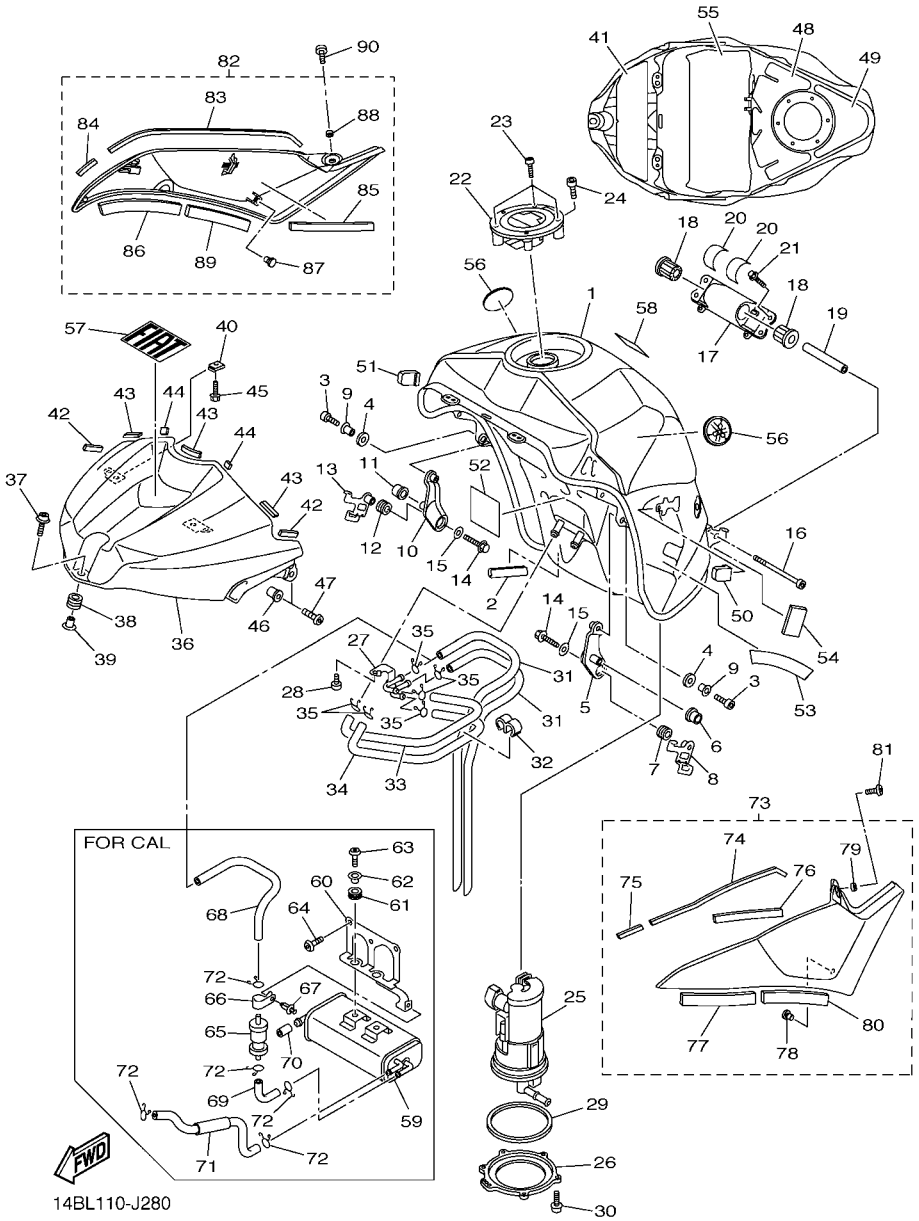

FIG. 28 FUEL TANK

REF. NO.	PART NO.	DESCRIPTION	14BL	14BM				REMARKS
1	14B–Y2410–00–03	FUEL TANK COMP.	1	1				DPBMC/BWC1
2	4BP–24188–00	MOLD, FUEL TANK	1	1				
3	91312–06016	BOLT	2	2				
4	5VY–24183–00	DAMPER, LOCATING 3	2	2				
5	14B–24191–00	BRACKET, FUEL TANK 1	1	1				
6	5VY–24181–00	DAMPER, LOCATING 1	1	1				
7	90480–10542	GROMMET	1	1				
8	14B–21161–00	HOLDER, CABLE	1	1				
9	90387–06143	COLLAR	2	2				
10	14B–24192–00	BRACKET, FUEL TANK 2	1	1				
11	5VY–24181–00	DAMPER, LOCATING 1	1	1				
12	90480–10542	GROMMET	1	1				
13	14B–21162–00	HOLDER, CLUTCH CABLE	1	1				
14	95022–06030	BOLT, FLANGE	2	2				
15	90201–06095	WASHER, PLATE	2	2				
16	90110–06296	BOLT, HEXAGON SOCKET HEAD	1	1				
17	14B–2413Y–00	BRACKET, TANK FITTING	1	1				
18	5SL–24183–00	DAMPER, LOCATING 3	2	2				
19	90387–06055	COLLAR	1	1				
20	14B–2414E–00	SEAL 2	2	2				
21	90110–06163	BOLT, HEXAGON SOCKET HEAD	4	4				
22	5JJ–24602–00	CAP ASSY	1	1				
23	90110–05112	BOLT, HEXAGON SOCKET HEAD	3	3				
24	91312–05010	BOLT	1	1				
25	14B–13907–00	FUEL PUMP COMP.	1	1				
26	13S–24491–00	BRACKET, FUEL PUMP	1	1				
27	14B–24135–00	CLAMP 1	1	1				

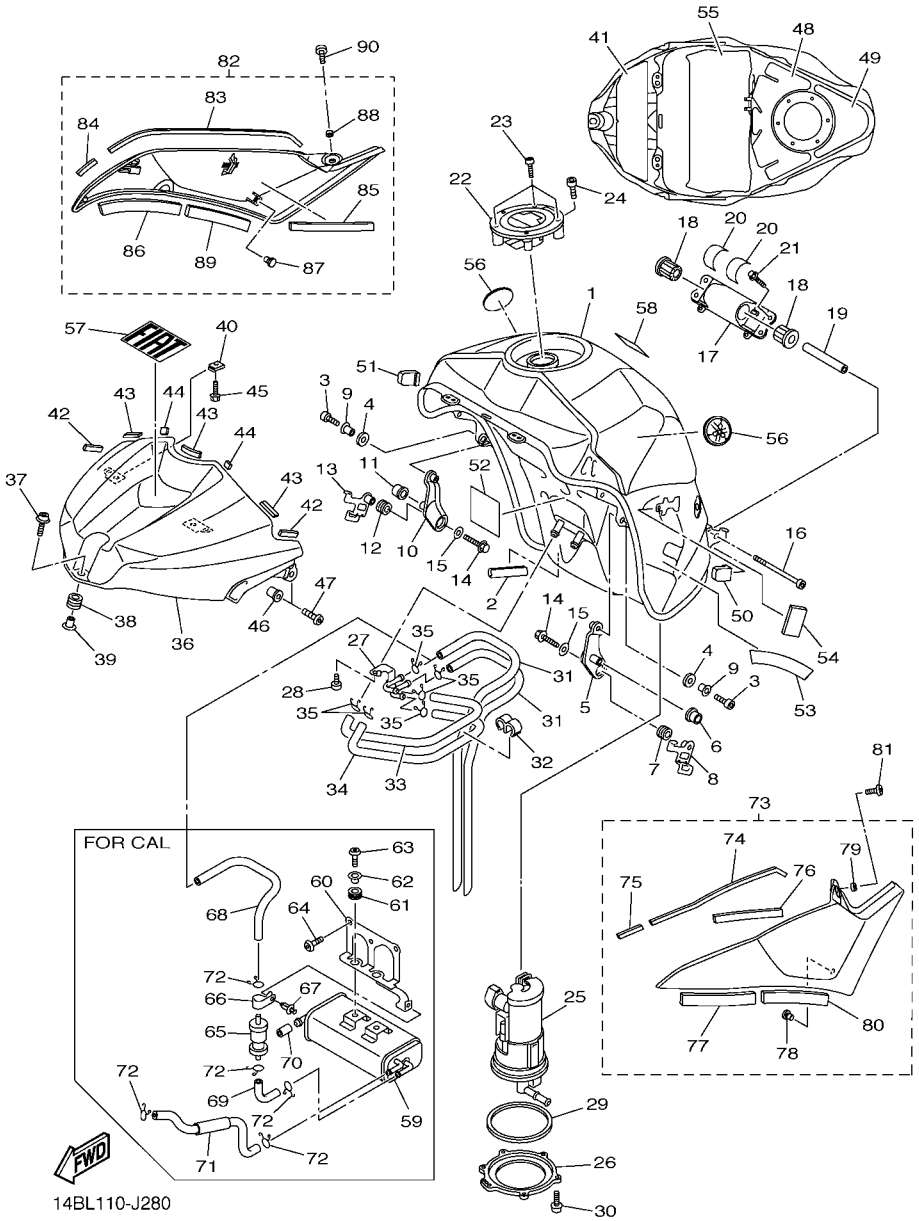

FIG. 28 FUEL TANK

REF. NO.	PART NO.	DESCRIPTION	14BL	14BM				REMARKS
28	90110–05030	BOLT, HEXAGON SOCKET HEAD	1	1				
29	5JW–24486–00	O-RING	1	1				
30	90110–05028	BOLT, HEXAGON SOCKET HEAD	6	6				
31	14B–24312–00	PIPE 2	2					
	14B–24312–00	PIPE 2		1				FOR CALIFORNIA
32	90464–09M31	CLAMP	1	1				
33	14B–24313–00	PIPE 3	1					
	14B–24313–10	PIPE 3		1				FOR CALIFORNIA
34	14B–24314–00	PIPE 4	1	1				
35	90467–09006	CLIP	6	6				
36	14B–2171A–00–0X	COVER, TOP	1	1				DPBMC/BWC1
37	90110–06233	BOLT, HEXAGON SOCKET HEAD	1	1				
38	90480–12023	GROMMET	1	1				
39	90387–06203	COLLAR	1	1				
40	90183–05074	NUT, SPRING	2	2				
41	14B–2414H–00	DAMPER, PLATE 1	1	1				
42	4C8–24182–00	DAMPER, LOCATING 2	2	2				
43	3XV–21778–00	DAMPER, LOCATING 1	3	3				
44	14B–24181–00	DAMPER, LOCATING 1	2	2				
45	90119–05015	BOLT, WITH WASHER	2	2				
46	90179–05523	NUT	2	2				
47	98902–05014	SCREW, BIND	2	2				
48	14B–2414N–00	DAMPER, PLATE 4	1	1				
49	14B–2414P–00	DAMPER, PLATE 5	1	1				
50	5PW–2411J–01	DAMPER, SIDE COVER	1	1				
51	5PW–2411J–01	DAMPER, SIDE COVER	1	1				
52	5VU–21747–00	DAMPER	1	1				

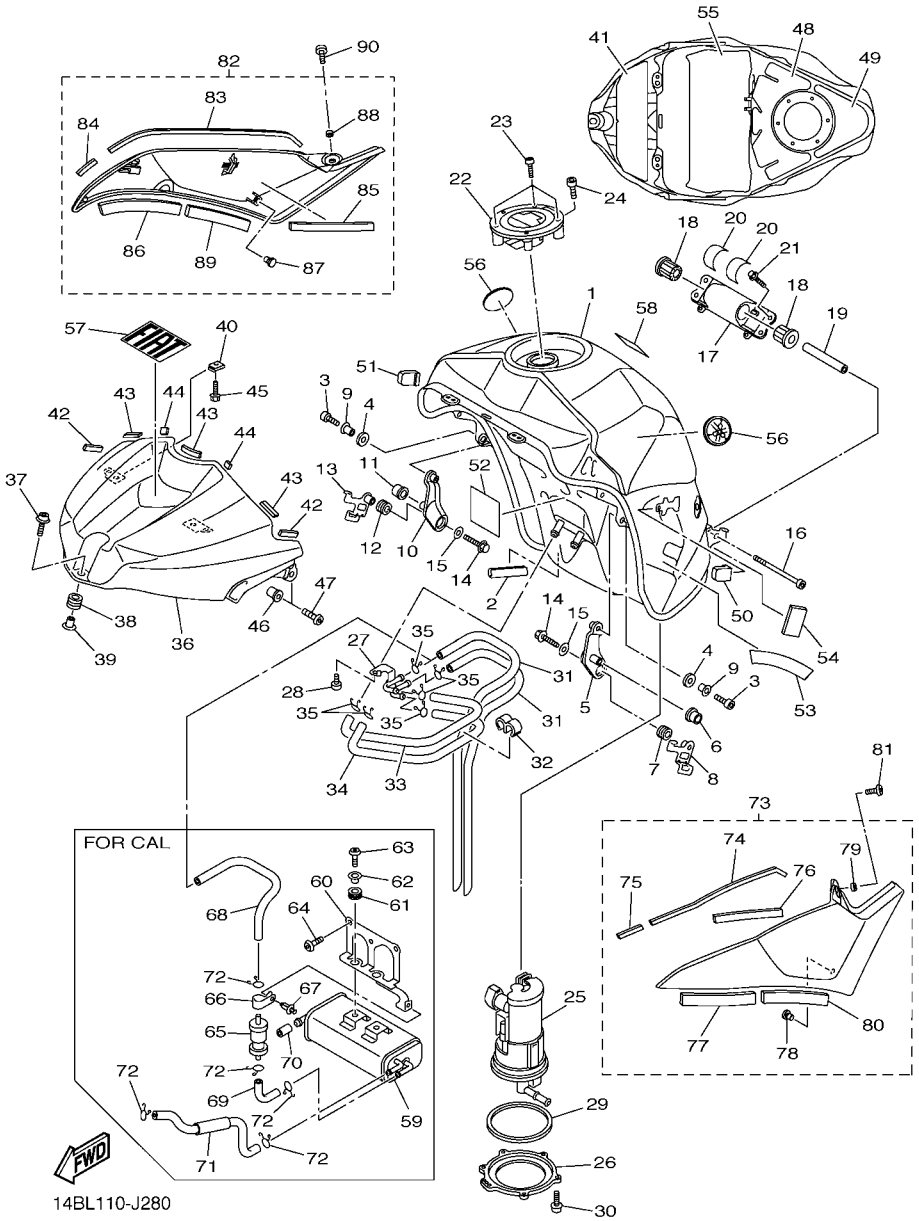

FIG. 28 FUEL TANK

REF. NO.	PART NO.	DESCRIPTION	14BL	14BM				REMARKS
53	14B–2414K–00	DAMPER, PLATE 3	2	2				
54	14B–2414G–00	SEAL	2	2				
55	90520–05002	DAMPER, PLATE	1	1				
56	5SL–2413B–10	EMBLEM	2	2				
57	14B–24161–00	EMBLEM 1	1	1				
58	4C8–2118K–00	LABEL, CAUTION	1	1				
59	14B–24170–00	CANISTER ASSY		1				FOR CALIFORNIA
60	14B–2419F–00	BRACKET, CANISTOR		1				FOR CALIFORNIA
61	90480–13018	GROMMET		2				FOR CALIFORNIA
62	90387–062L2	COLLAR		2				FOR CALIFORNIA
63	92012–06016	BOLT, BUTTON HEAD		2				FOR CALIFORNIA
64	90111–06051	BOLT,HEX. SOCKET BUTTON		3				FOR CALIFORNIA
65	5PX–24180–00	ROLL OVER VALVE ASSY		1				FOR CALIFORNIA
66	90461–15139	CLAMP		1				FOR CALIFORNIA
67	90269–05001	RIVET		1				FOR CALIFORNIA
68	14B–24315–00	PIPE 5		1				FOR CALIFORNIA
69	14B–24316–00	PIPE 6		1				FOR CALIFORNIA
70	90445–11418	HOSE (L18)		1				FOR CALIFORNIA
71	14B–1443J–00	PIPE		1				FOR CALIFORNIA
72	90467–09006	CLIP		5				FOR CALIFORNIA
73	14B–24106–00	TANK SIDE COVER ASSY 1	1	1				
74	2C0–2414H–00	.DAMPER, PLATE 1	1	1				
75	14B–2414J–00	.DAMPER, PLATE 2	1	1				
76	4C8–2414J–00	.DAMPER, PLATE 2	1	1				
77	2C0–2414J–00	.DAMPER, PLATE 2	1	1				
78	90338–06018	.PLUG	1	1				
79	90560–05N33	.SPACER	1	1				

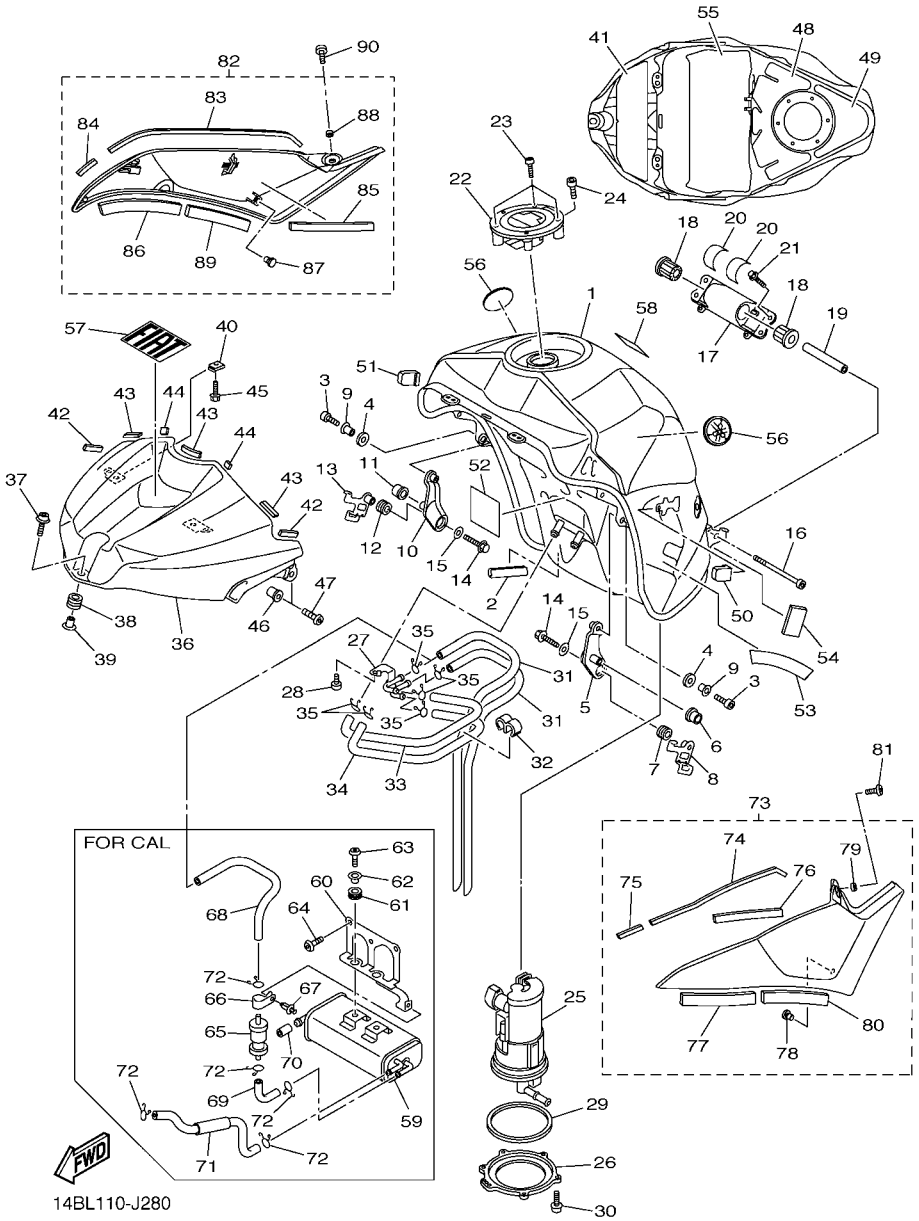

FIG. 28 FUEL TANK

REF. NO.	PART NO.	DESCRIPTION	14BL	14BM				REMARKS
80	90520–10005	.DAMPER, PLATE	1	1				
81	98902–05008	SCREW, BIND	1	1				
82	14B–24108–00	TANK SIDE COVER ASSY 2	1	1				
83	2C0–2414H–00	.DAMPER, PLATE 1	1	1				
84	14B–2414J–00	.DAMPER, PLATE 2	1	1				
85	4C8–2414J–00	.DAMPER, PLATE 2	1	1				
86	2C0–2414J–00	.DAMPER, PLATE 2	1	1				
87	90338–06018	.PLUG	1	1				
88	90560–05N33	.SPACER	1	1				
89	90520–10005	.DAMPER, PLATE	1	1				
90	98902–05008	SCREW, BIND	1	1				

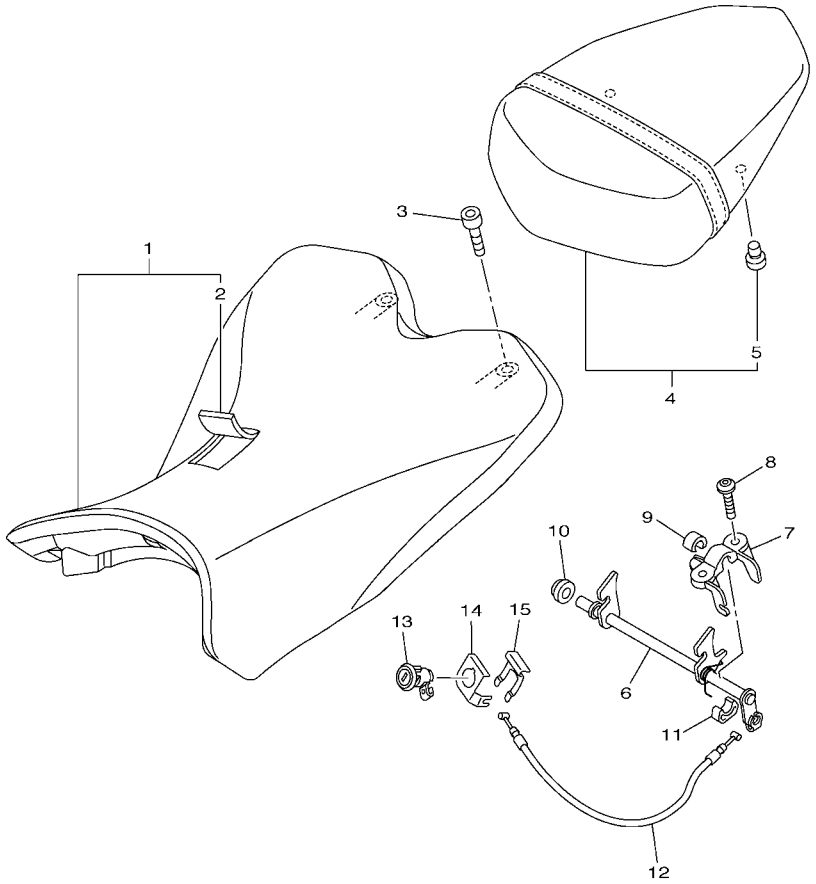

14B1300-H290

FIG. 29 SEAT

REF. NO.	PART NO.	DESCRIPTION	14BL	14BM				REMARKS
1	14B–24710–00	SINGLE SEAT ASSY	1	1				
2	14B–24711–00	.COVER, SINGLE SEAT	1	1				
3	90110–06258	BOLT, HEXAGON SOCKET HEAD	2	2				
4	14B–24750–00	TANDEM SEAT ASSY	1	1				
5	5SL–24723–00	.DAMPER, SEAT	2	2				
6	14B–24780–00	SEAT LOCK ASSY	1	1				
7	2C0–24792–00	PLATE	1	1				
8	90111–06051	BOLT,HEX. SOCKET BUTTON	2	2				
9	14B–24725–00	SPACER 1	1	1				
10	13S–24725–00	SPACER 1	1	1				
11	13S–24847–00	HOLDER 1	1	1				
12	14B–2478E–00	CABLE, SEAT LOCK	1	1				
13	5VY–W2470–00	ROTOR SET	1	1				
14	5VY–2117K–01	STAY, LOCK	1	1				
15	5VY–2176V–00	SPRING, LOCK 2	1	1				

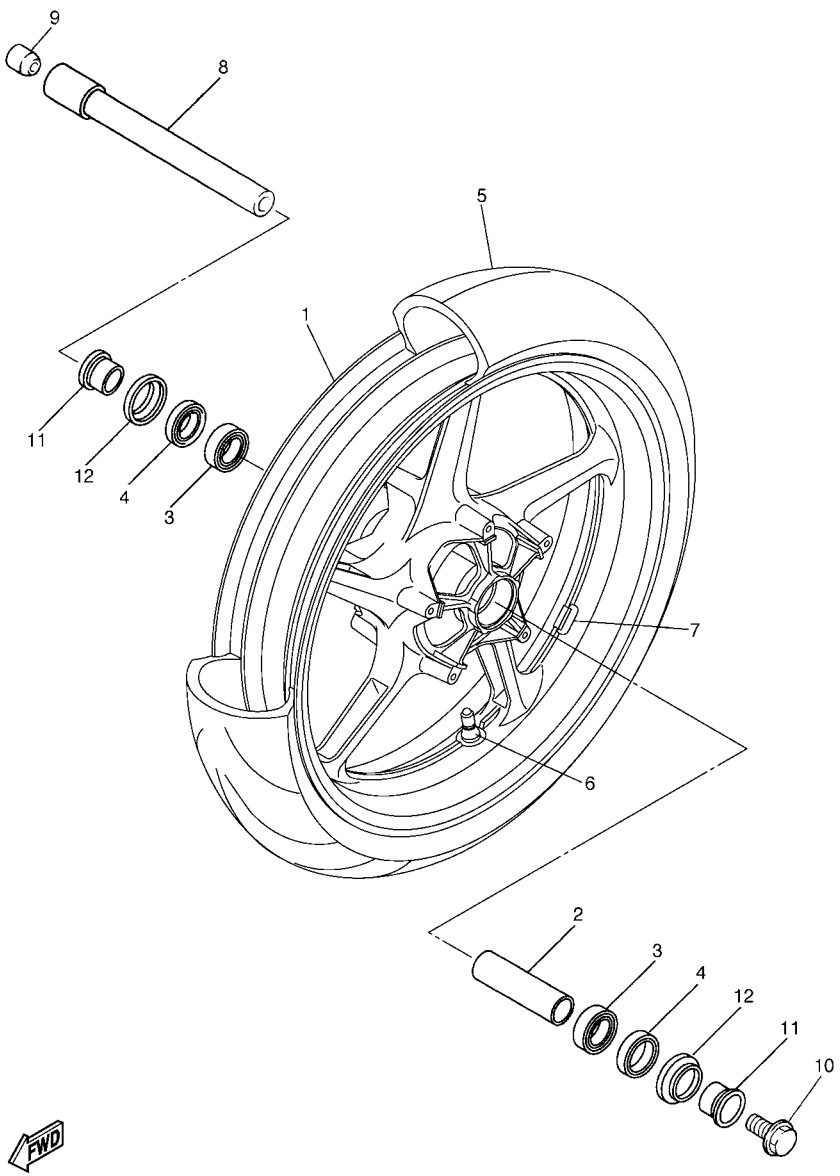

4C81332-F300

FIG. 30 FRONT WHEEL

REF. NO.	PART NO.	DESCRIPTION	14BL	14BM				REMARKS
1	5VY–25168–00–98	CAST WHEEL, FRONT	1	1				LGB
2	4XV–25117–00	SPACER, BEARING	1	1				
3	93306–07208	BEARING	2	2				
4	93106–28043	OIL SEAL	2	2				
5	94112–17104	TIRE(120/70 ZR17M/C 58W D210F)	1	1				DUNLOP
6	93900–00030	VALVE, RIM (TR412)	1	1				TAIHEIYO
7	5MT–25398–00	BALANCER, WHEEL (10G)	1	1				UN
	5MT–25398–10	BALANCER, WHEEL (20G)	1	1				UN
	5MT–25398–20	BALANCER, WHEEL (30G)	1	1				UN
8	2C0–25181–00	AXLE, WHEEL	1	1				
9	5PW–25188–00	CAP	1	1				
10	90105–14002	BOLT, FLANGE	1	1				
11	4XV–25186–00	COLLAR, WHEEL	2	2				
12	4XV–25118–00	COVER, HUB DUST	2	2				

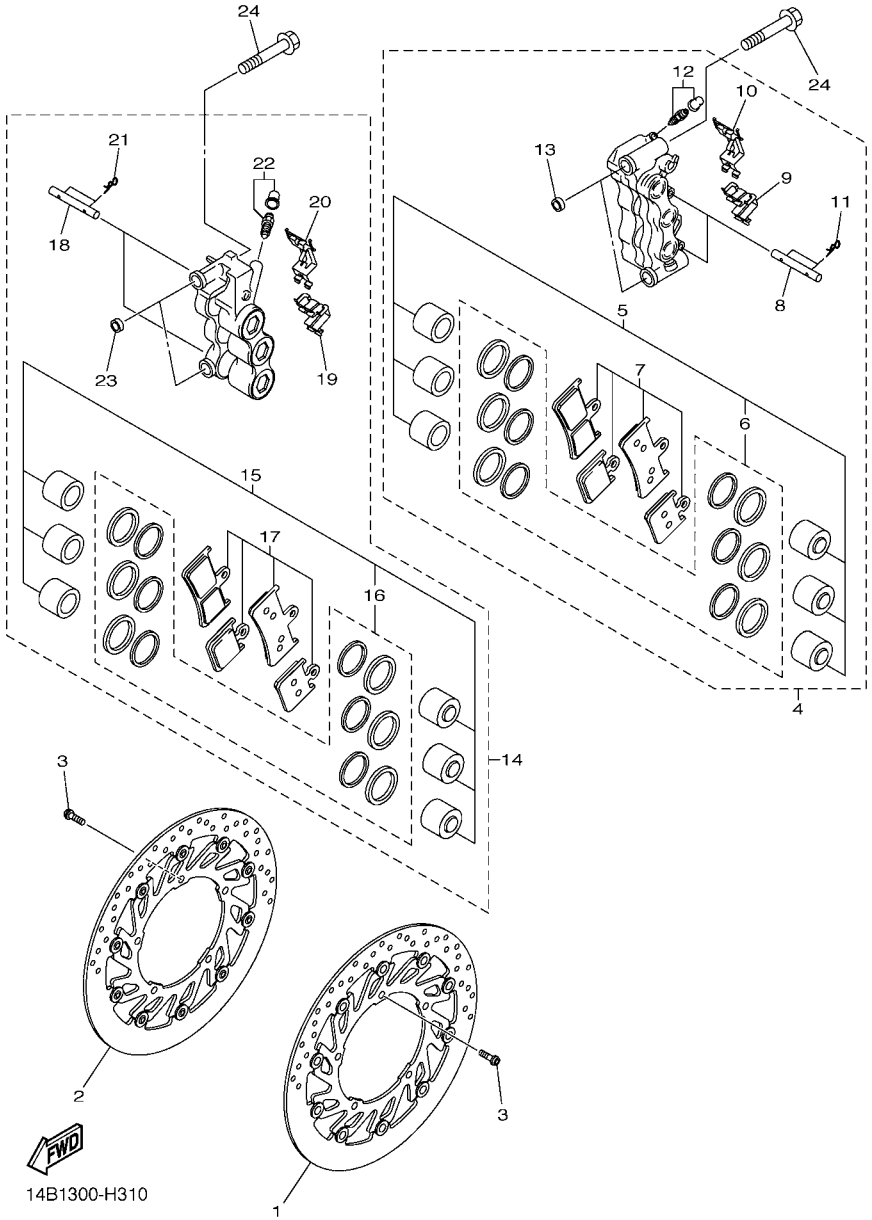

FIG. 31 FRONT BRAKE CALIPER

REF. NO.	PART NO.	DESCRIPTION	14BL	14BM				REMARKS
1	14B–2581T–00	DISK BRAKE ASSY	1	1				
2	14B–2581U–00	DISK BRAKE ASSY (RIGHT)	1	1				
3	90149–06043	SCREW	10	10				
4	4C8–2580T–10	CALIPER ASSY (LEFT)	1	1				
5	4C8–W0057–00	.PISTON ASSY, CALIPER	1	1				
6	4C8–W0047–00	..CALIPER SEAL KIT	1	1				
7	4C8–W0045–00	.BRAKE PAD KIT	1	1				
8	4SV–25924–00	.PIN, PAD	2	2				
9	4C8–25919–00	.SUPPORT, PAD	1	1				
10	2S3–25919–10	.SUPPORT, PAD	1	1				
11	3GM–25925–00	.CLIP	4	4				
12	1J3–W0048–00	.BLEED SCREW KIT	1	1				
13	5VY–2583B–00	.PIN, KNOCK	2	2				
14	4C8–2580U–10	CALIPER ASSY (RIGHT)	1	1				
15	4C8–W0057–00	.PISTON ASSY, CALIPER	1	1				
16	4C8–W0047–00	..CALIPER SEAL KIT	1	1				
17	4C8–W0045–00	.BRAKE PAD KIT	1	1				
18	4SV–25924–00	.PIN, PAD	2	2				
19	4C8–25919–00	.SUPPORT, PAD	1	1				
20	2S3–25919–10	.SUPPORT, PAD	1	1				
21	3GM–25925–00	.CLIP	4	4				
22	1J3–W0048–00	.BLEED SCREW KIT	1	1				
23	5VY–2583B–00	.PIN, KNOCK	2	2				
24	90401–10012	BOLT, UNION	4	4				

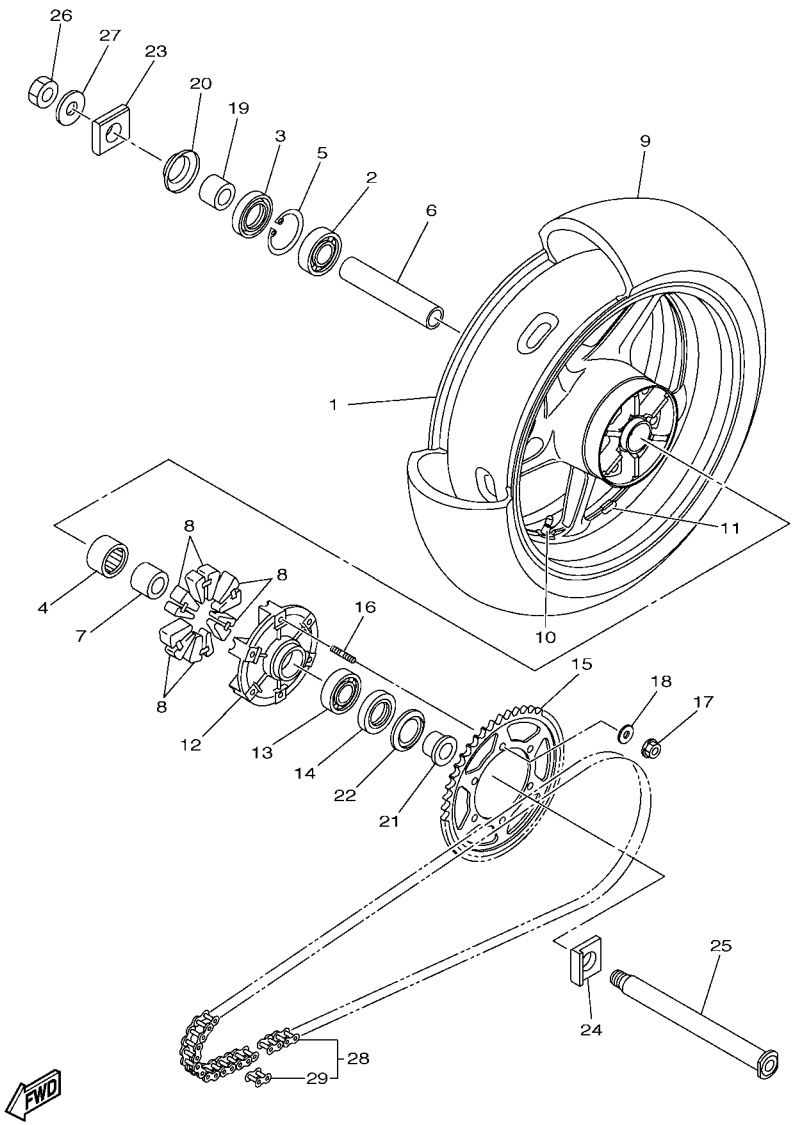

FIG. 32 REAR WHEEL

REF. NO.	PART NO.	DESCRIPTION	14BL	14BM				REMARKS
1	5VY–25338–00–98	CAST WHEEL, REAR	1	1				LGB
2	93306–20531	BEARING	1	1				
3	93106–40013	OIL SEAL	1	1				
4	93317–43580	BEARING	1	1				
5	93420–61M07	CIRCLIP	1	1				
6	5PW–25317–00	SPACER, BEARING	1	1				
7	4XV–25383–00	COLLAR, WHEEL	1	1				
8	2C0–25364–00	DAMPER	6	6				
9	94119–17067	TIRE(190/55 ZR17 M/C 75W D210)	1	1				DUNLOP
10	93900–00030	VALVE, RIM (TR412)	1	1				TAIHEIYO
11	5MT–25398–00	BALANCER, WHEEL (10G)	1	1				UN
	5MT–25398–10	BALANCER, WHEEL (20G)	1	1				UN
	5MT–25398–20	BALANCER, WHEEL (30G)	1	1				UN
12	5SL–25366–00	CLUTCH, HUB	1	1				
13	93306–20531	BEARING	1	1				
14	93106–40013	OIL SEAL	1	1				
15	14B–25447–20	SPROCKET, DRIVEN (47T)	1	1				
16	90116–10048	BOLT, STUD	6	6				
17	90185–10009	NUT, SELF-LOCKING	6	6				
18	90201–10021	WASHER, PLATE	6	6				
19	5PW–25377–00	COLLAR, WHEEL	1	1				
20	5PW–25367–00	COVER, HUB DUST	1	1				
21	5SL–25376–00	COLLAR, WHEEL	1	1				
22	5SL–25367–00	COVER, HUB DUST	1	1				
23	5VY–25388–00	PULLER, CHAIN 1	1	1				
24	5VY–25389–01	PULLER, CHAIN 2	1	1				
25	4C8–25381–00	AXLE, WHEEL	1	1				

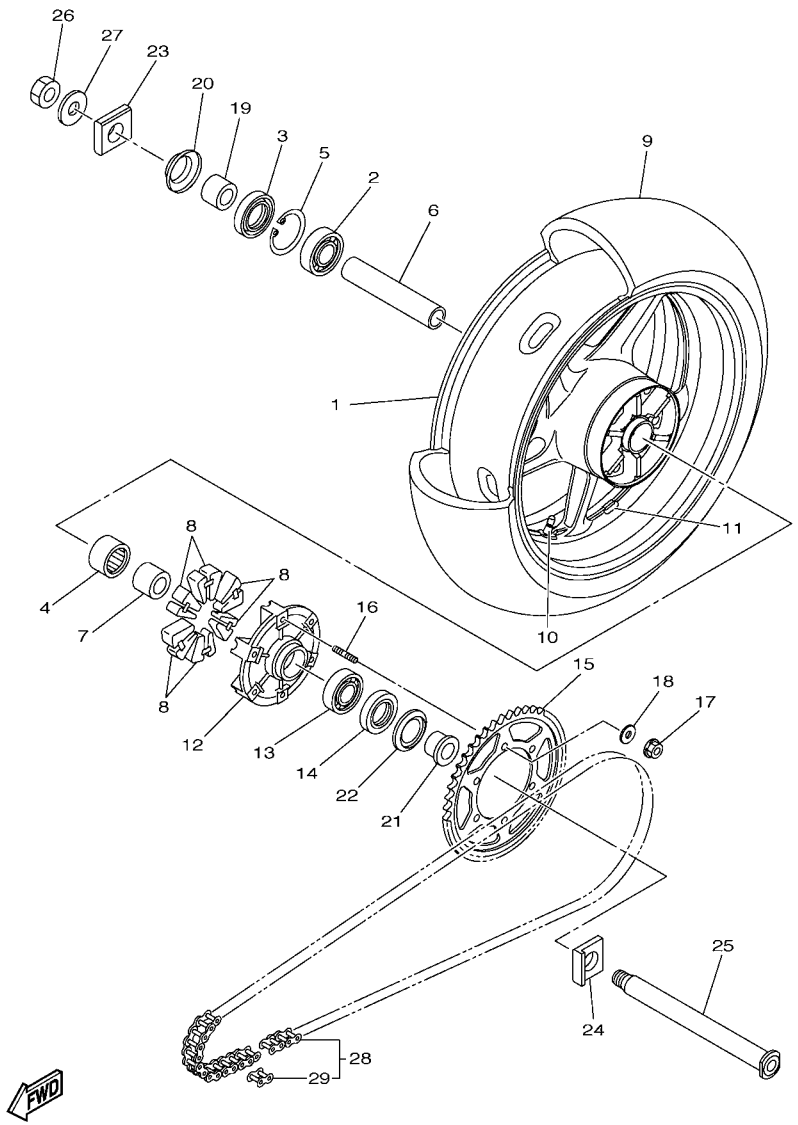

FIG. 32 REAR WHEEL

REF. NO.	PART NO.	DESCRIPTION	14BL	14BM				REMARKS
26	90185–24007	NUT, SELF-LOCKING	1	1				
27	90201–25020	WASHER, PLATE	1	1				
28	94582–30120	CHAIN (DID 50VAZ-120LL)	1	1				
29	94682–30031	.JOINT, CHAIN (DID 50VAZ-ZJ)	1	1				

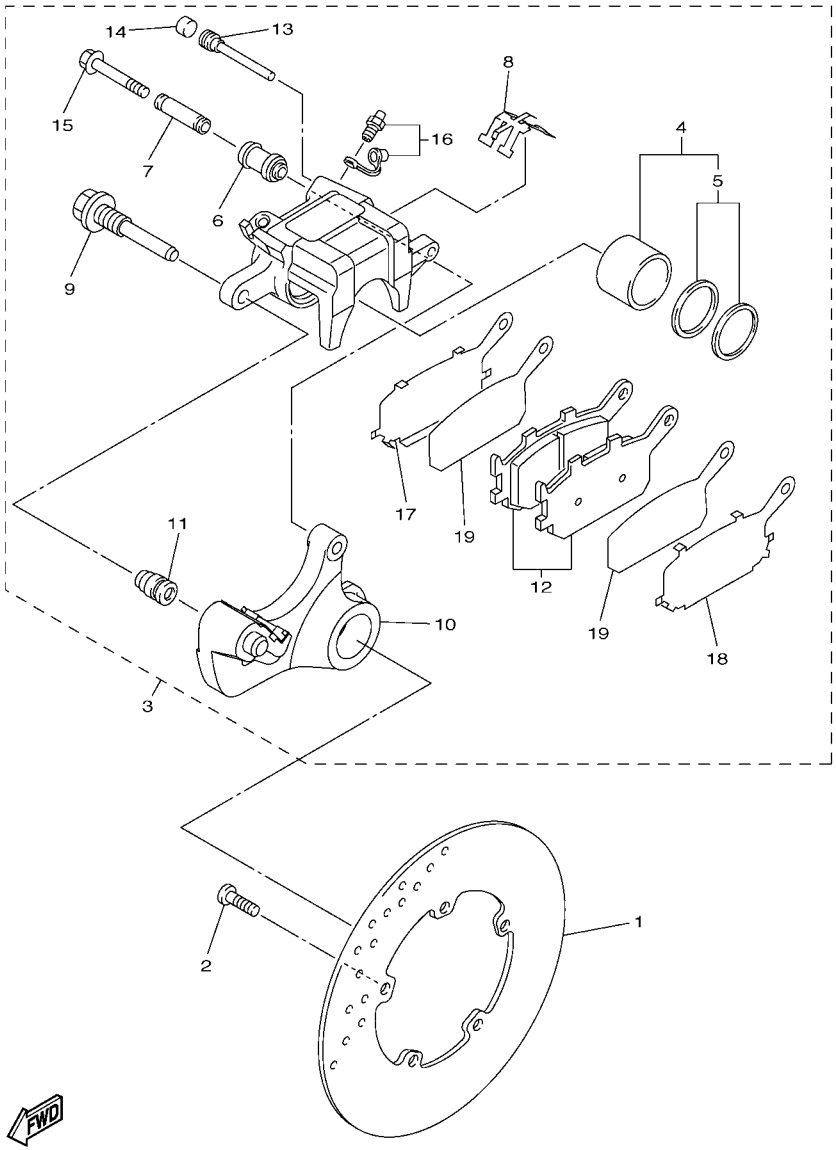

14B1300-H330

FIG. 33 REAR BRAKE CALIPER

REF. NO.	PART NO.	DESCRIPTION	14BL	14BM				REMARKS
1	5SL–2582W–00	DISK, REAR BRAKE 2	1	1				
2	90149–08009	SCREW	5	5				
3	5VY–2580W–12	CALIPER ASSY, REAR 2	1	1				
4	5VY–W0057–00	.PISTON ASSY, CALIPER	1	1				
5	5SL–W0047–00	..CALIPER SEAL KIT	1	1				
6	5SL–25917–00	.BOOT, CALIPER	1	1				
7	5SL–25838–00	.SLEEVE, CALIPER	1	1				
8	5SL–25919–00	.SUPPORT, PAD	1	1				
9	5SL–25914–00	.PIN, SLIDE	1	1				
10	5VY–25921–01	.BRACKET, SUPPORT	1	1				
11	3JD–25917–00	.BOOT, CALIPER	1	1				
12	5VX–W0046–00	.BRAKE PAD KIT 2	1	1				
13	8CR–25924–00	.PIN, PAD	1	1				
14	5DH–25916–00	.PLUG	1	1				
15	5SL–25926–00	.BOLT	1	1				
16	1UY–W0048–00	.BLEED SCREW KIT	1	1				
17	5SL–25827–00	.SHIM, CALIPER	1	1				
18	5SL–25827–10	.SHIM, CALIPER	1	1				
19	5SL–25828–01	.SHIM, CALIPER	2	2				

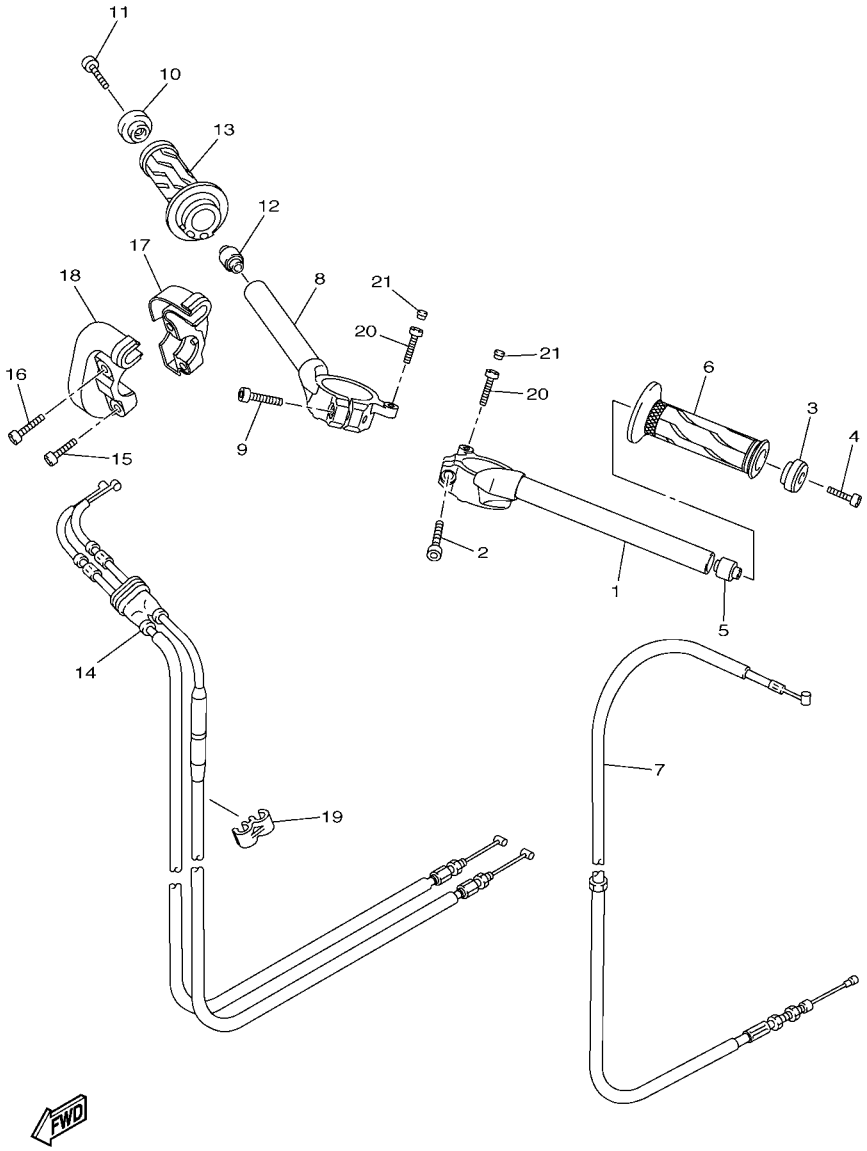

14B1300-H340

FIG. 34 STEERING HANDLE & CABLE

REF. NO.	PART NO.	DESCRIPTION	14BL	14BM				REMARKS
1	14B–26121–00	HANDLEBAR (LEFT)	1	1				
2	91314–08030	BOLT, HEXAGON SOCKET HEAD	1	1				
3	5PW–26246–00	END, GRIP	1	1				
4	91317–06025	BOLT	1	1				
5	4XV–23434–00	HOLDER, DAMPER	1	1				
6	2C0–26241–00	GRIP	1	1				
7	14B–26335–01	CABLE, CLUTCH	1	1				
8	14B–26122–00	HANDLEBAR (RIGHT)	1	1				
9	91314–08030	BOLT, HEXAGON SOCKET HEAD	1	1				
10	5PW–26246–00	END, GRIP	1	1				
11	91317–06025	BOLT	1	1				
12	4XV–23434–00	HOLDER, DAMPER	1	1				
13	4C8–26240–00	GRIP ASSY	1	1				
14	14B–26302–01	THROTTLE CABLE ASSY	1	1				
15	91317–05020	BOLT	1	1				
16	91317–05025	BOLT	1	1				
17	3LN–26281–01	CAP, GRIP UPPER	1	1				
18	3LN–26282–01	CAP, GRIP UNDER	1	1				
19	90464–06214	CLAMP	1	1				
20	91312–06025	BOLT	2	2				
21	2H9–23469–00	CAP, BOLT	2	2				

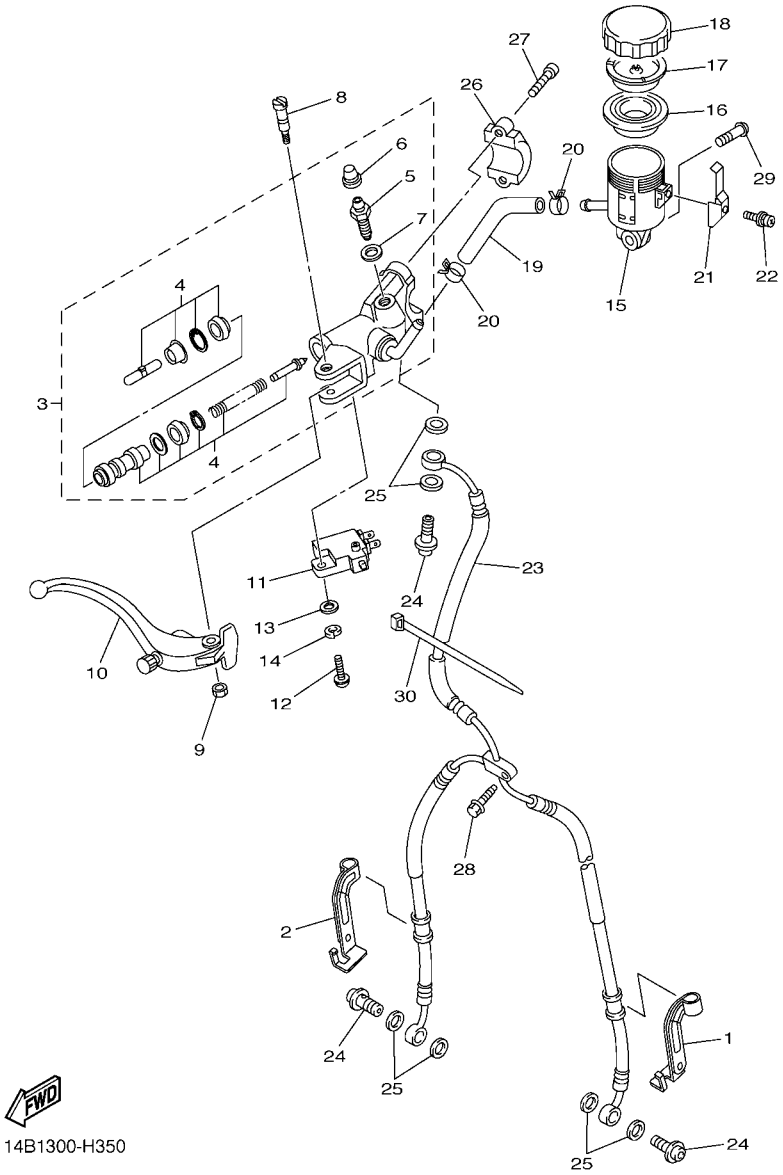

FIG. 35 FRONT MASTER CYLINDER

REF. NO.	PART NO.	DESCRIPTION	14BL	14BM				REMARKS
1	14B–25875–00	HOLDER, BRAKE HOSE 1	1	1				
2	14B–25876–00	HOLDER, BRAKE HOSE 2	1	1				
3	14B–W2587–00	MASTER CYLINDER SUB ASSY	1	1				
4	2S3–W0041–00	.CYLINDER KIT, MASTER	1	1				
5	3YK–25824–00	.SCREW, BLEED	1	1				
6	3YK–25825–00	.CAP	1	1				
7	5VY–25975–00	.SEAL 1	1	1				
8	5VY–2589F–01	BOLT, LEVER	1	1				
9	95617–06100	NUT, U	1	1				
10	14B–83922–00	LEVER 2	1	1				
11	4HM–83980–00	FRONT STOP SWITCH ASSY	1	1				
12	98502–04012	SCREW, PAN HEAD	1	1				
13	92902–04100	WASHER, SPRING	1	1				
14	92902–04600	WASHER, PLATE	1	1				
15	5SL–25894–20	TANK, RESERVOIR	1	1				
16	5VY–25854–00	DIAPHRAGM, RESERVOIR	1	1				
17	5VY–25855–00	BUSH,DIAPHRAGM	1	1				
18	5VY–25852–00	CAP, RESERVOIR	1	1				
19	5VY–25895–10	HOSE, RESERVOIR	1	1				
20	90467–120A3	CLIP	2	2				
21	5VY–2589G–00	HOLDER	1	1				
22	5VY–2589H–00	SCREW	1	1				
23	14B–25872–00	HOSE, BRAKE 1	1	1				
24	90401–10172	BOLT, UNION	3	3				
25	90430–10005	GASKET	6	6				
26	5VS–25867–00	BRACKET, MASTER CYLINDER	1	1				
27	5VS–26332–00	BOLT	2	2				

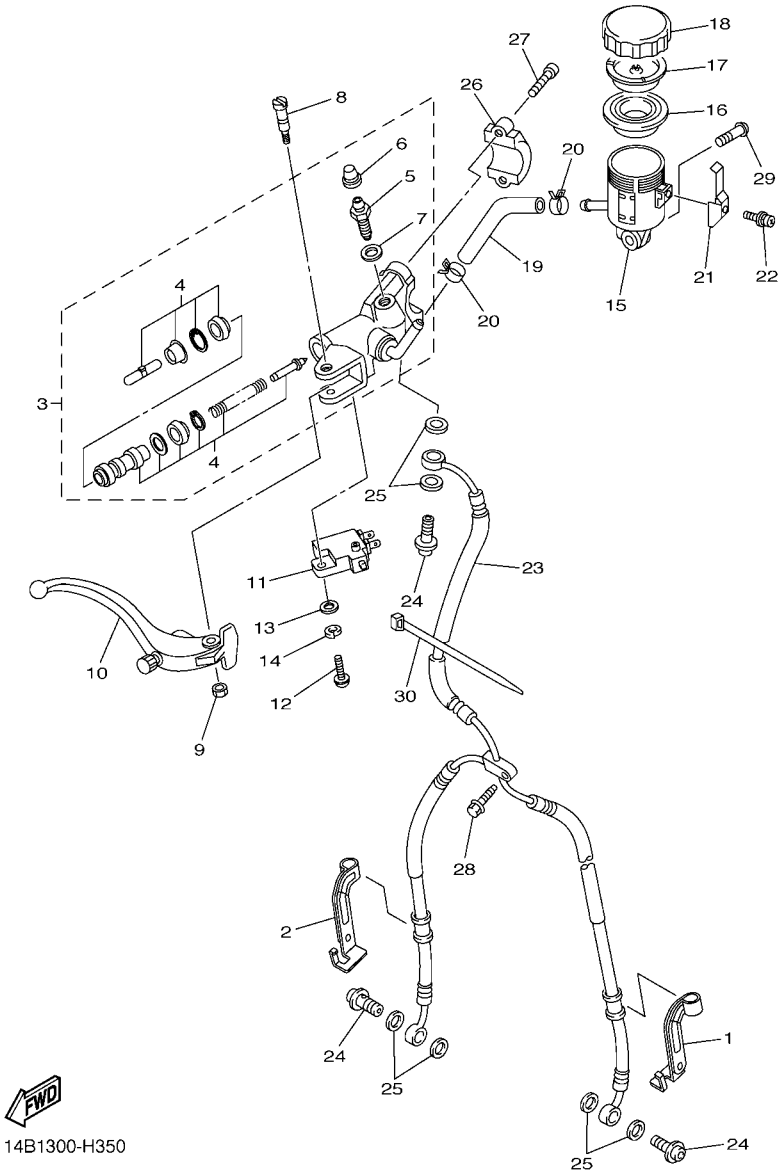

FIG. 35 FRONT MASTER CYLINDER

REF. NO.	PART NO.	DESCRIPTION	14BL	14BM				REMARKS
28	90105–06041	BOLT, FLANGE	1	1				
29	90111–05026	BOLT,HEX. SOCKET BUTTON	1	1				
30	90464–59001	CLAMP	1	1				

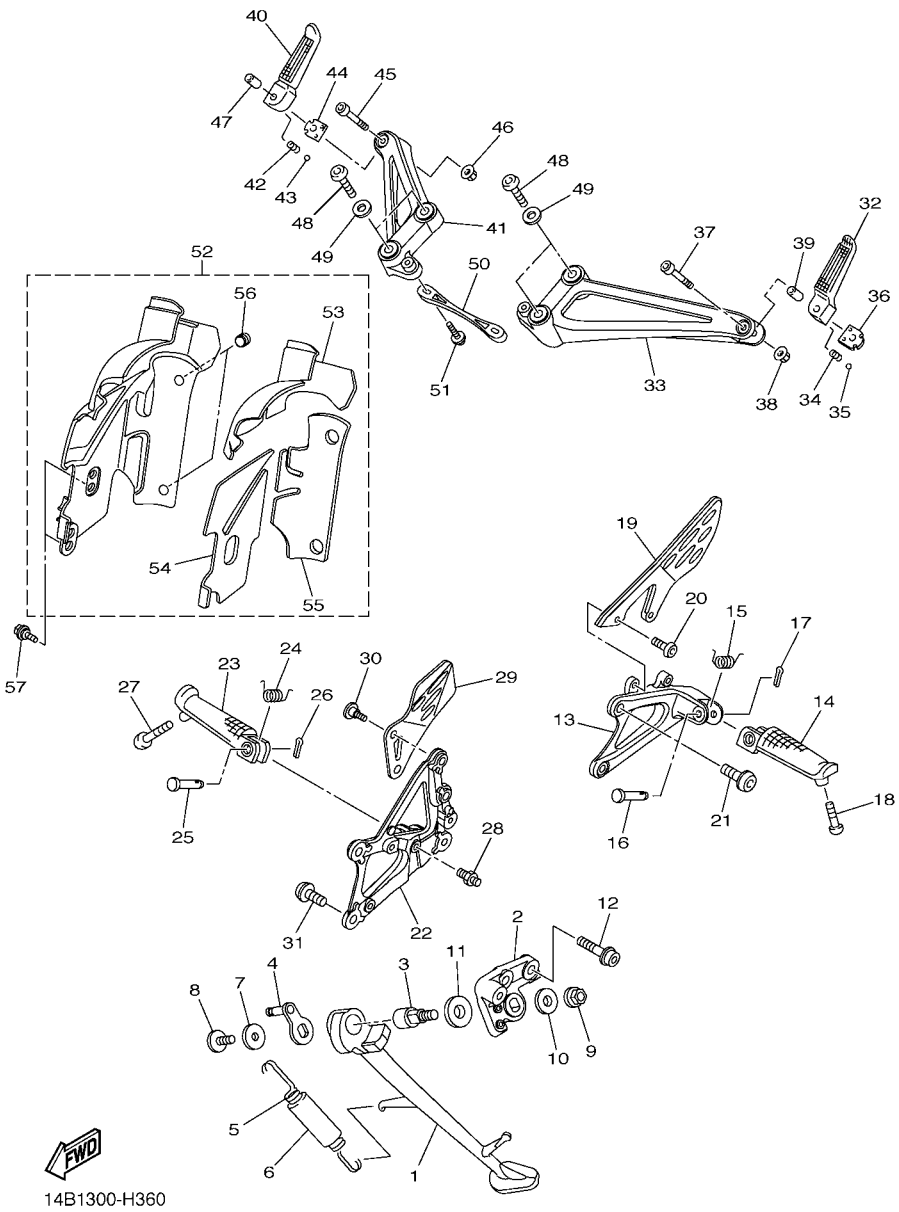

FIG. 36 STAND & FOOTREST

REF. NO.	PART NO.	DESCRIPTION	14BL	14BM				REMARKS
1	14B–27311–00	STAND, SIDE	1	1				
2	14B–27321–00	BRACKET, SIDE STAND	1	1				
3	14B–27351–00	GUIDE, SIDE STAND	1	1				
4	14B–27352–00	HOOK, SIDE STAND	1	1				
5	90506–18008	SPRING, TENSION	1	1				
6	90445–19002	HOSE (L60)	1	1				
7	90201–081R9	WASHER, PLATE	1	1				
8	90111–08073	BOLT,HEX. SOCKET BUTTON	1	1				
9	95607–10200	NUT, U FLANGE	1	1				
10	90201–101J1	WASHER, PLATE	1	1				
11	90201–146F9	WASHER, PLATE	1	1				
12	90109–10002	BOLT	2	2				
13	14B–27442–00	BRACKET 2	1	1				
14	5JJ–27451–00	FOOTREST	1	1				
15	90508–18134	SPRING, TORSION	1	1				
16	90240–08084	PIN, CLEVIS	1	1				
17	91401–25015	PIN, COTTER	1	1				
18	90109–08174	BOLT	1	1				
19	14B–27445–00	PLATE 1	1	1				
20	90111–06003	BOLT,HEX. SOCKET BUTTON	2	2				
21	90109–085G6	BOLT	2	2				
22	14B–27443–00	BRACKET 3	1	1				
23	5JJ–27461–00	FOOTREST	1	1				
24	90508–18135	SPRING, TORSION	1	1				
25	90240–08084	PIN, CLEVIS	1	1				
26	91401–25015	PIN, COTTER	1	1				
27	90109–08174	BOLT	1	1				

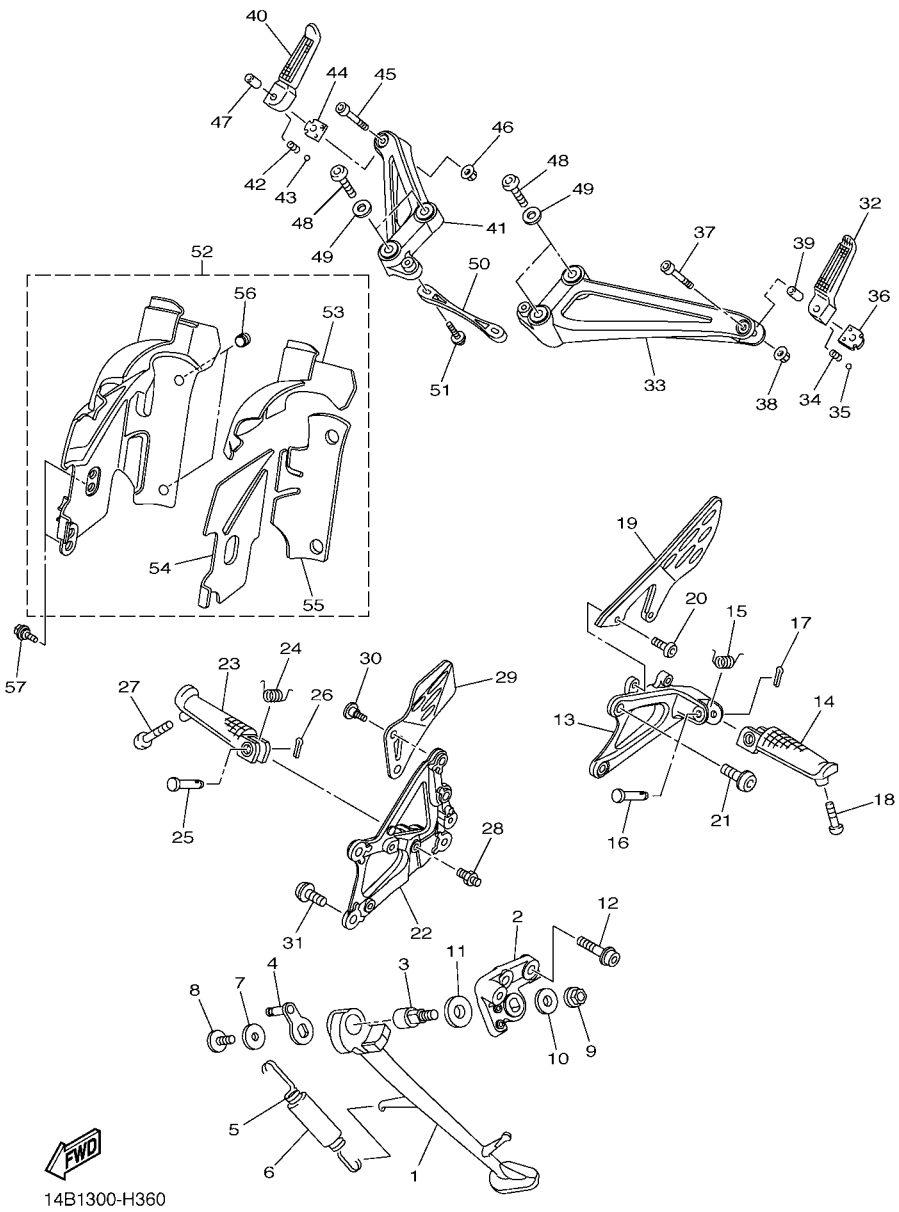

FIG. 36 STAND & FOOTREST

REF. NO.	PART NO.	DESCRIPTION	14BL	14BM				REMARKS
28	4C8–27813–00	PIN, PEDAL CRANK	1	1				
29	14B–27446–00	PLATE 2	1	1				
30	90109–066F0	BOLT	2	2				
31	90109–085G6	BOLT	2	2				
32	5JJ–27431–00	FOOTREST, REAR 1	1	1				
33	14B–2741L–00	BRACKET 4	1	1				
34	90501–12743	SPRING, COMPRESSION	1	1				
35	93501–04011	BALL	1	1				
36	5JJ–27437–01	WASHER, SPECIAL	1	1				
37	91314–06035	BOLT, HEXAGON SOCKET HEAD	1	1				
38	95604–06200	NUT, U FLANGE	1	1				
39	90387–06697	COLLAR	1	1				
40	5JJ–27441–00	FOOTREST, REAR 2	1	1				
41	14B–2742L–00	BRACKET 5	1	1				
42	90501–12743	SPRING, COMPRESSION	1	1				
43	93501–04011	BALL	1	1				
44	5JJ–27437–01	WASHER, SPECIAL	1	1				
45	91314–06035	BOLT, HEXAGON SOCKET HEAD	1	1				
46	95604–06200	NUT, U FLANGE	1	1				
47	90387–06697	COLLAR	1	1				
48	90111–08066	BOLT,HEX. SOCKET BUTTON	4	4				
49	13S–27417–00	WASHER, FOOTREST	4	4				
50	14B–27469–00	REINFORCEMENT 1	1	1				
51	90111–06030	BOLT,HEX. SOCKET BUTTON	2	2				
52	14B–27490–00	PROTECTOR ASSY	1	1				
53	14B–2749A–00	.SEAT 3	1	1				
54	14B–2749B–00	.SEAT 4	1	1				

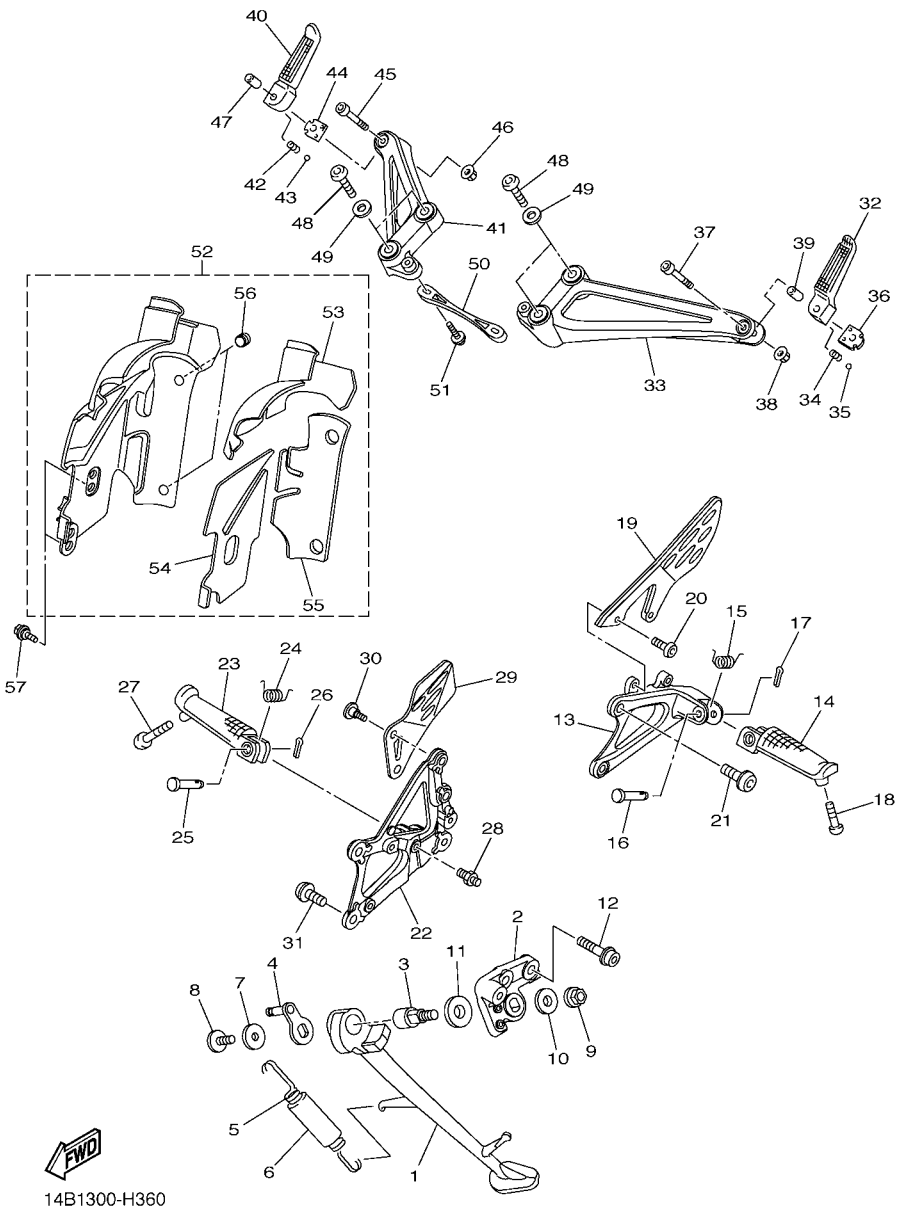

FIG. 36 STAND & FOOTREST

REF. NO.	PART NO.	DESCRIPTION	14BL	14BM				REMARKS
55	14B–2749D–00	.SEAT 6	1	1				
56	2D1–14737–00	.DAMPER, MUFFLER	2	2				
57	90109–06264	BOLT	2	2				

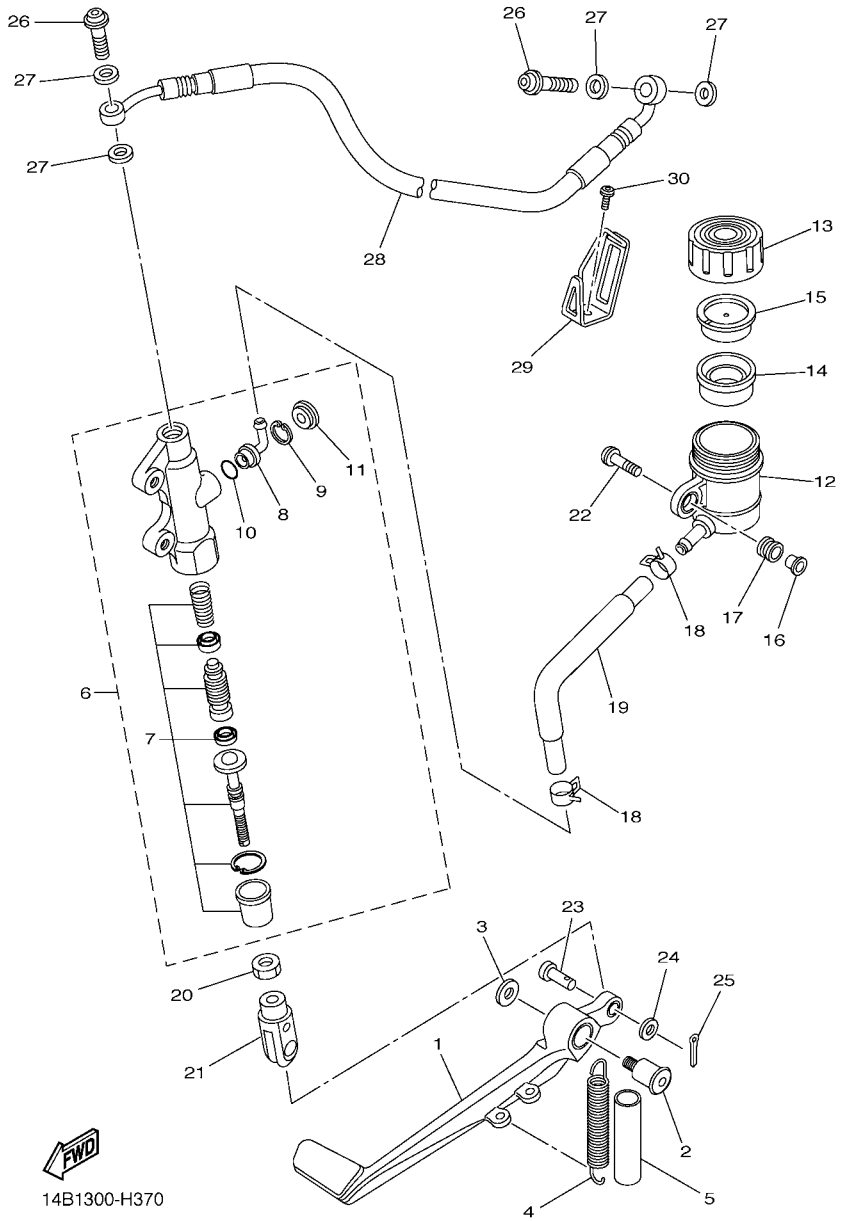

FIG. 37 REAR MASTER CYLINDER

REF. NO.	PART NO.	DESCRIPTION	14BL	14BM				REMARKS
1	14B–27211–00	PEDAL, BRAKE	1	1				
2	4C8–27434–00	BOLT	1	1				
3	90201–08103	WASHER, PLATE	1	1				
4	90506–18022	SPRING, TENSION	1	1				
5	90446–15386	HOSE	1	1				
6	14B–2583V–00	RR. MASTER CYLINDER ASSY.	1	1				
7	14B–W0042–00	.CYLINDER KIT, MASTER	1	1				
8	4ML–2582A–50	.JOINT	1	1				
9	2VN–25866–00	.CIRCLIP	1	1				
10	93210–15620	.O-RING	1	1				
11	3FV–2589A–00	.COVER, DUST	1	1				
12	14B–25894–00	TANK, RESERVOIR	1	1				
13	2C0–25852–00	CAP, RESERVOIR	1	1				
14	2VN–25854–00	DIAPHRAGM, RESERVOIR	1	1				
15	2VN–25855–00	BUSH,DIAPHRAGM	1	1				
16	90387–05028	COLLAR	1	1				
17	2C0–26326–00	GROMMET	1	1				
18	90467–12085	CLIP	2	2				
19	14B–25895–00	HOSE, RESERVOIR	1	1				
20	95307–08700	NUT	1	1				
21	4XV–27222–01	JOINT	1	1				
22	90111–05026	BOLT,HEX. SOCKET BUTTON	1	1				
23	91702–06018	PIN, CLEVIS	1	1				
24	92902–06200	WASHER	1	1				
25	91402–16012	PIN, COTTER	1	1				
26	90401–10172	BOLT, UNION	2	2				
27	90430–10005	GASKET	4	4				

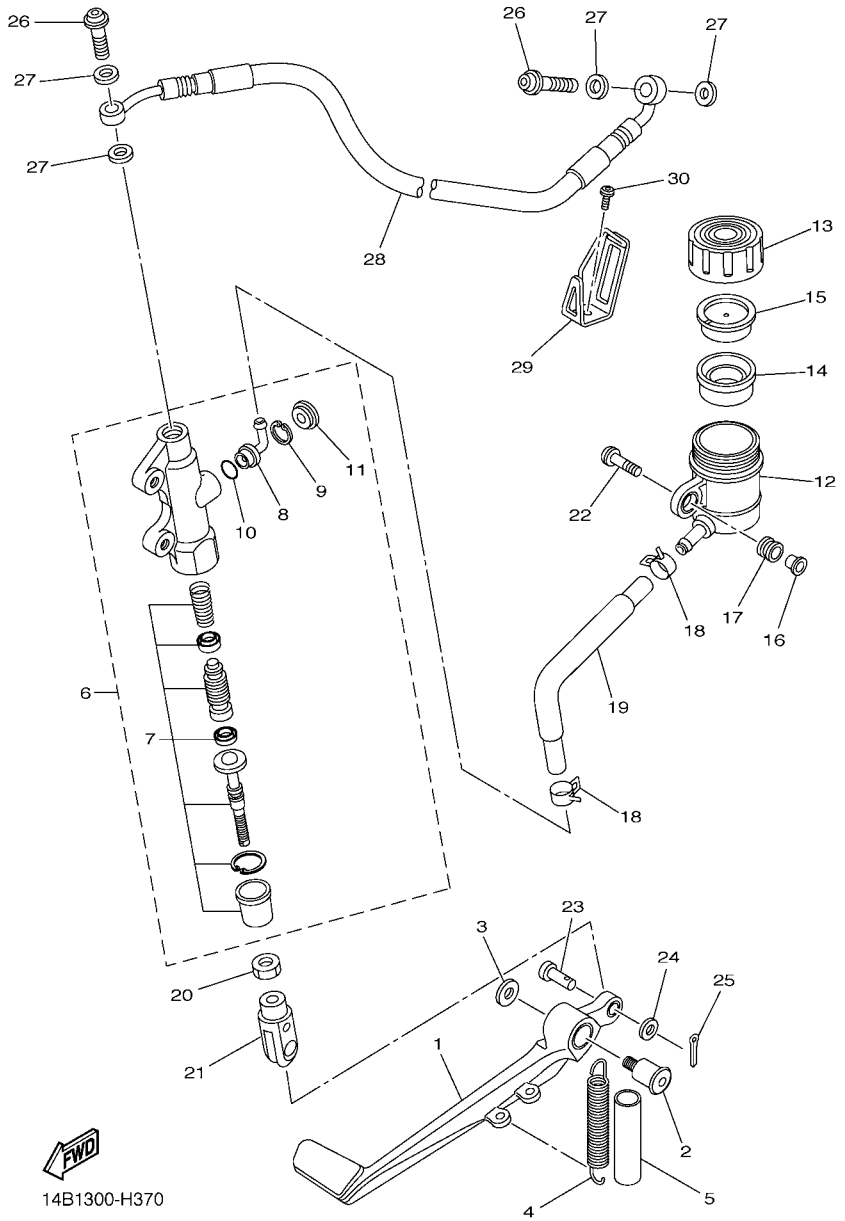

FIG. 37 REAR MASTER CYLINDER

REF. NO.	PART NO.	DESCRIPTION	14BL	14BM				REMARKS
28	14B–25874–00	HOSE, BRAKE	1	1				
29	14B–2588F–00	HOLDER, BRAKE HOSE 5	1	1				
30	90111–06038	BOLT,HEX. SOCKET BUTTON	1	1				

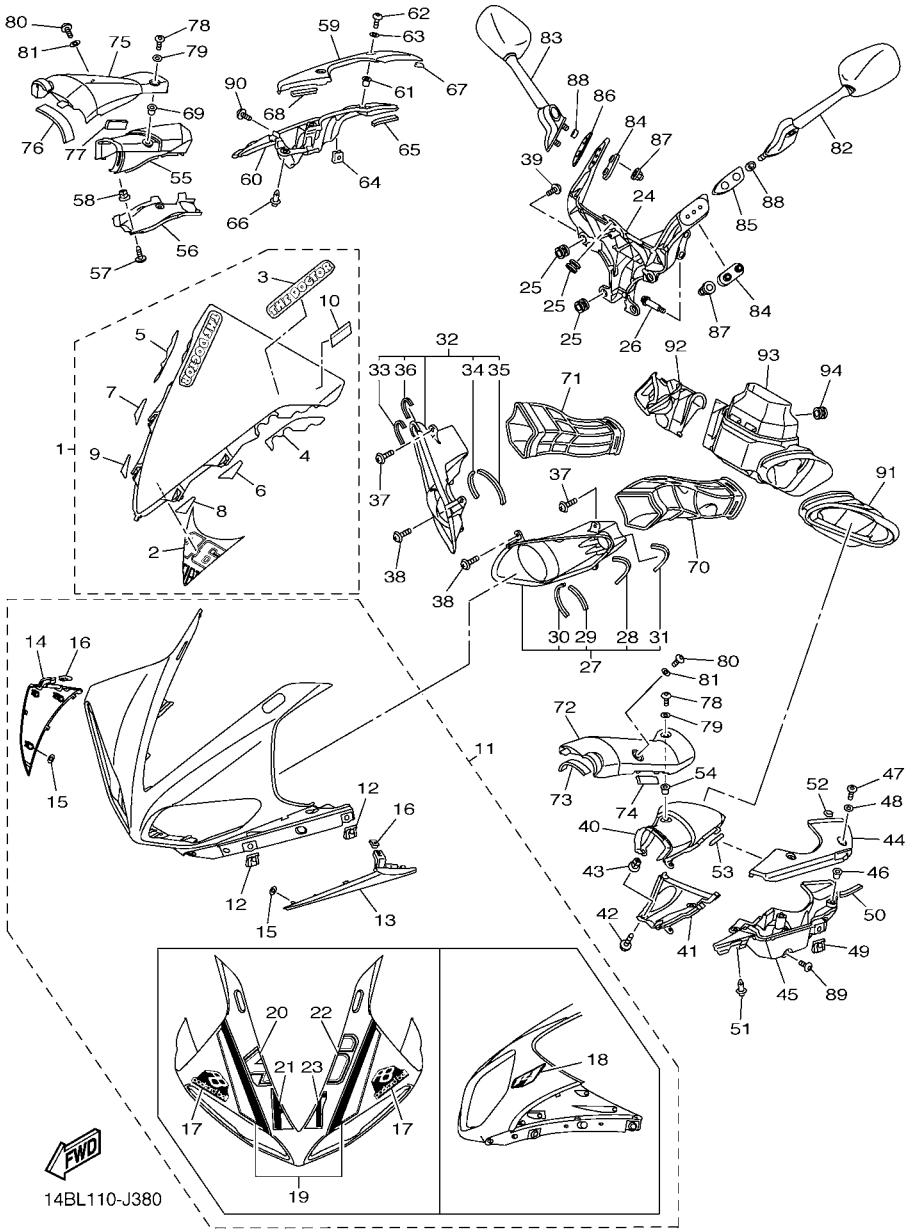

FIG. 38 COWLING 1

REF. NO.	PART NO.	DESCRIPTION	14BL	14BM				REMARKS
1	14B–Y283P–40	SCREEN	1	1				
2	14B–283BX–00	.GRAPHIC 46	1	1				
3	5SL–28338–00	.EMBLEM	1	1				
4	14B–28428–00	.SEAL 1	1	1				
5	14B–28429–00	.SEAL 2	1	1				
6	14B–2844E–00	.SEAL 3	1	1				
7	14B–2846F–00	.SEAL 4	1	1				
8	14B–2847F–00	.SEAL 5	1	1				
9	14B–2848F–00	.SEAL 6	1	1				
10	4B5–2815K–00	.LABEL, NOTICE WINDSHIELD 1	1	1				
11	14B–Y283G–80–0X	BODY, FRONT UPPER 1	1	1				DPBMC/BWC1
12	5PW–2177L–00	.PLATE, SPRING	4	4				
13	14B–28219–00–P3	.COVER 1	1	1				MBL2
14	14B–28229–00–P3	.COVER 2	1	1				MBL2
15	90183–05M02	.NUT, SPRING	6	6				
16	90183–05076	.NUT, SPRING	2	2				
17	14B–2835C–00	.EMBLEM 2	2	2				
18	14B–2834C–00	.EMBLEM 1	1	1				
19	14B–2834X–00	.GRAPHIC SET 1, COWLING	1	1				
20	14B–28394–00	.GRAPHIC, 4	1	1				
21	14B–28398–00	.GRAPHIC, 5	1	1				
22	14B–28399–00	.GRAPHIC, 6	1	1				
23	14B–2839A–00	.GRAPHIC, 7	1	1				
24	14B–28356–00	STAY 1	1	1				
25	4XV–83513–00	DAMPER	7	7				
26	90105–08052	BOLT, FLANGE	2	2				
27	14B–2838B–00	GRILL ASSY	1	1				

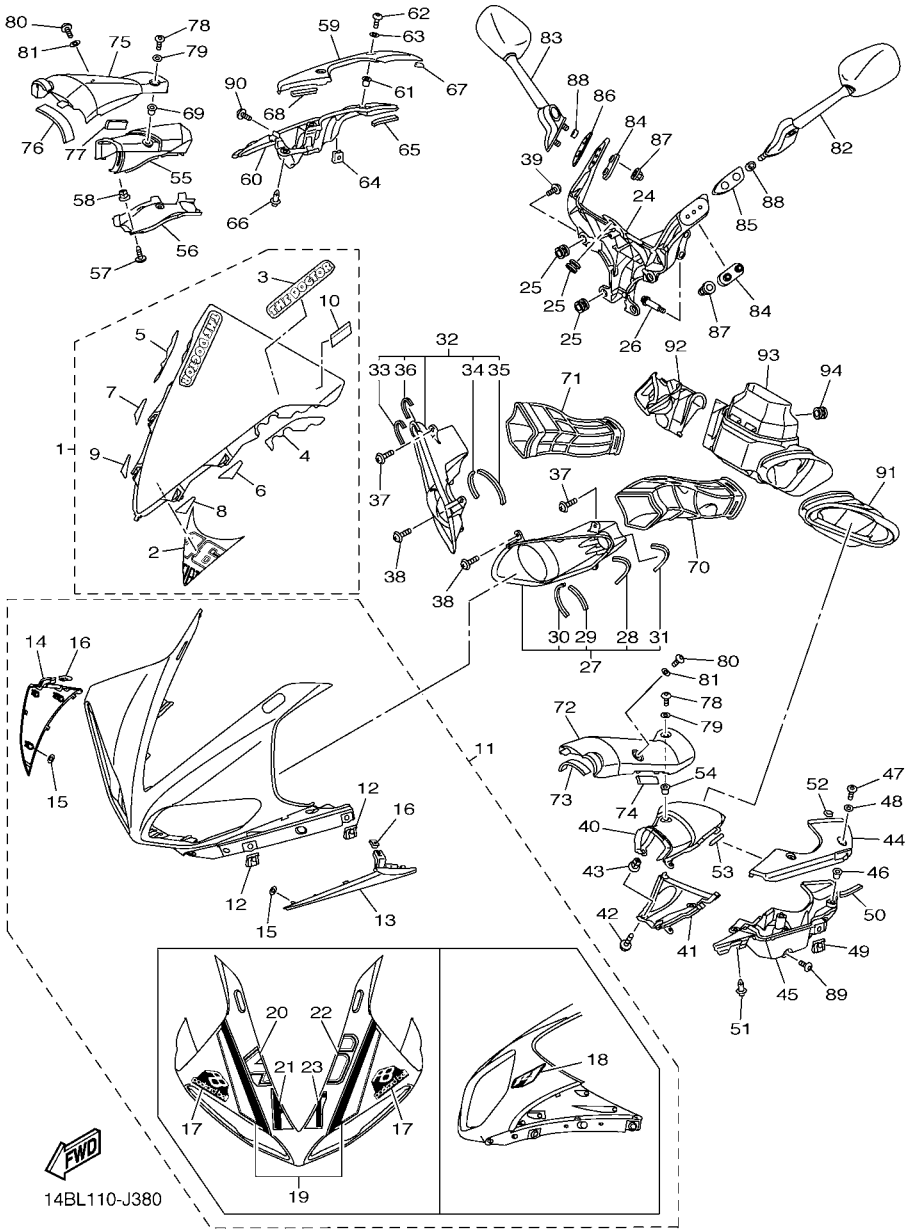

FIG. 38 COWLING 1

REF. NO.	PART NO.	DESCRIPTION	14BL	14BM				REMARKS
28	14B–28372–00	.DAMPER	1	1				
29	J44–78248–00	.SEAL 4	1	1				
30	90520–03001	.DAMPER, PLATE	1	1				
31	1TX–28267–00	.DAMPER 5	1	1				
32	14B–2838B–10	GRILL ASSY	1	1				
33	14B–28372–00	.DAMPER	1	1				
34	J44–78248–00	.SEAL 4	1	1				
35	90520–03001	.DAMPER, PLATE	1	1				
36	1TX–28267–00	.DAMPER 5	1	1				
37	90160–05007	SCREW, ROUND TAPPING	4	4				
38	97707–50012	SCREW, TRUSS HEAD TAPPING	2	2				
39	90160–05006	SCREW, ROUND TAPPING	4	4				
40	14B–2838N–00–P6	DUCT 1	1	1				DPBMC
41	14B–2838T–00	DUCT 3	1	1				
42	97702–50012	SCREW, TAPPING	2	2				
43	90480–08005	GROMMET	2	2				
44	14B–2839K–00–P6	LID 1	1	1				DPBMC
45	14B–2838V–00	BOX 3	1	1				
46	90179–05523	NUT	2	2				
47	90111–05034	BOLT,HEX. SOCKET BUTTON	2	2				
48	90202–05180	WASHER, PLATE	2	2				
49	5PW–2177L–00	PLATE, SPRING	1	1				
50	J44–78248–00	SEAL 4	1	1				
51	90269–07077	RIVET	1	1				
52	90520–01001	DAMPER, PLATE	1	1				
53	90520–03005	DAMPER, PLATE	1	1				
54	90179–05523	NUT	1	1				

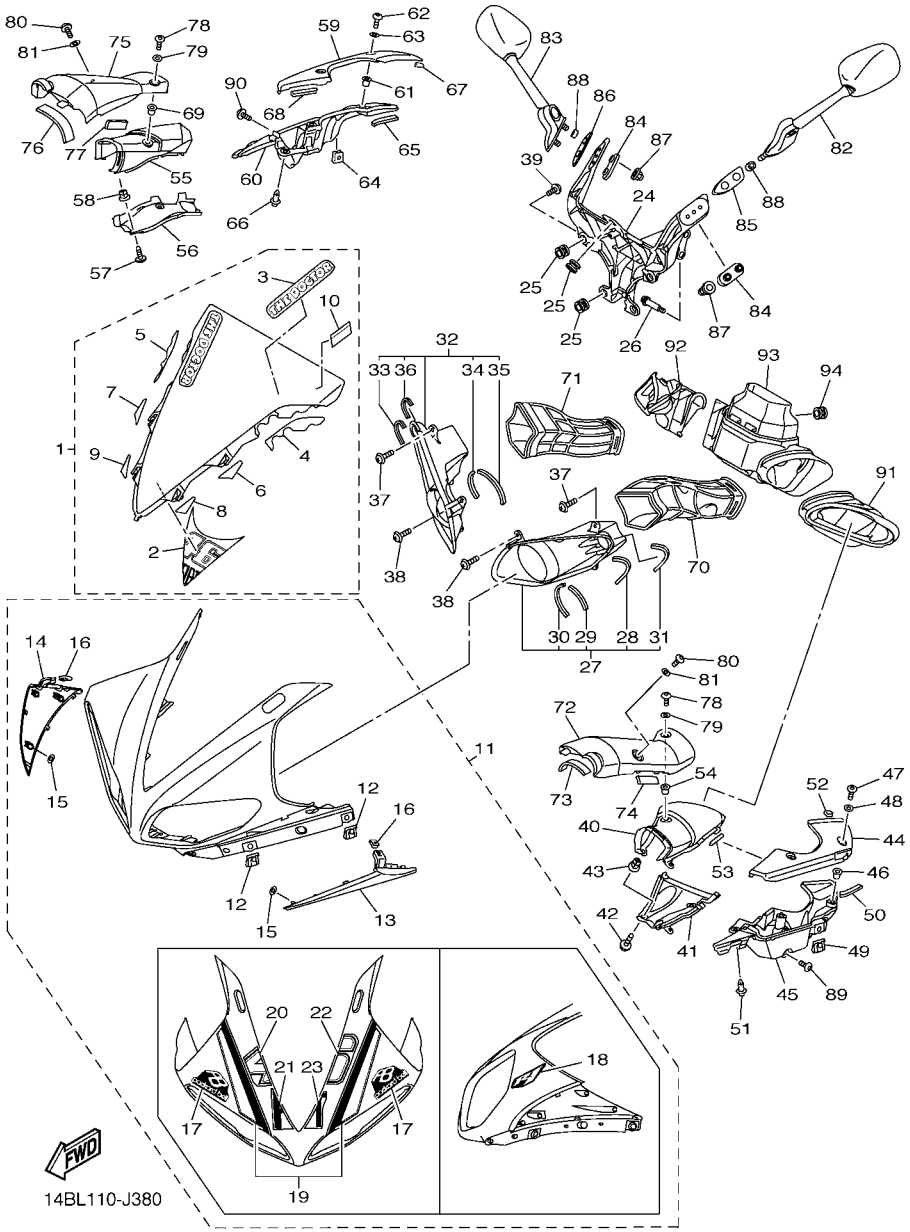

FIG. 38 COWLING 1

REF. NO.	PART NO.	DESCRIPTION	14BL	14BM				REMARKS
55	14B–2838R–00–P6	DUCT 2	1	1				DPBMC
56	14B–2838U–00	DUCT 4	1	1				
57	97702–50012	SCREW, TAPPING	2	2				
58	90480–08005	GROMMET	2	2				
59	14B–2839L–00–P6	LID 2	1	1				DPBMC
60	14B–2838W–00	BOX 4	1	1				
61	90179–05523	NUT	2	2				
62	90111–05034	BOLT,HEX. SOCKET BUTTON	2	2				
63	90202–05180	WASHER, PLATE	2	2				
64	5PW–2177L–00	PLATE, SPRING	1	1				
65	J44–78248–00	SEAL 4	1	1				
66	90269–07077	RIVET	1	1				
67	90520–01001	DAMPER, PLATE	1	1				
68	90520–03005	DAMPER, PLATE	1	1				
69	90179–05523	NUT	1	1				
70	14B–2838J–00	DUCT 5	1	1				
71	14B–2838P–00	DUCT 6	1	1				
72	14B–2837L–00–P6	PANEL, CONSOLE 1	1	1				DPBMC
73	4C8–2112D–00	DAMPER, 3	1	1				
74	2S3–2111D–00	SEAL 1	1	1				
75	14B–2837M–00–P6	PANEL, CONSOLE 2	1	1				DPBMC
76	4C8–2112D–00	DAMPER, 3	1	1				
77	2S3–2111D–00	SEAL 1	1	1				
78	90111–05034	BOLT,HEX. SOCKET BUTTON	2	2				
79	90202–05180	WASHER, PLATE	2	2				
80	90111–05034	BOLT,HEX. SOCKET BUTTON	2	2				
81	90202–05180	WASHER, PLATE	2	2				

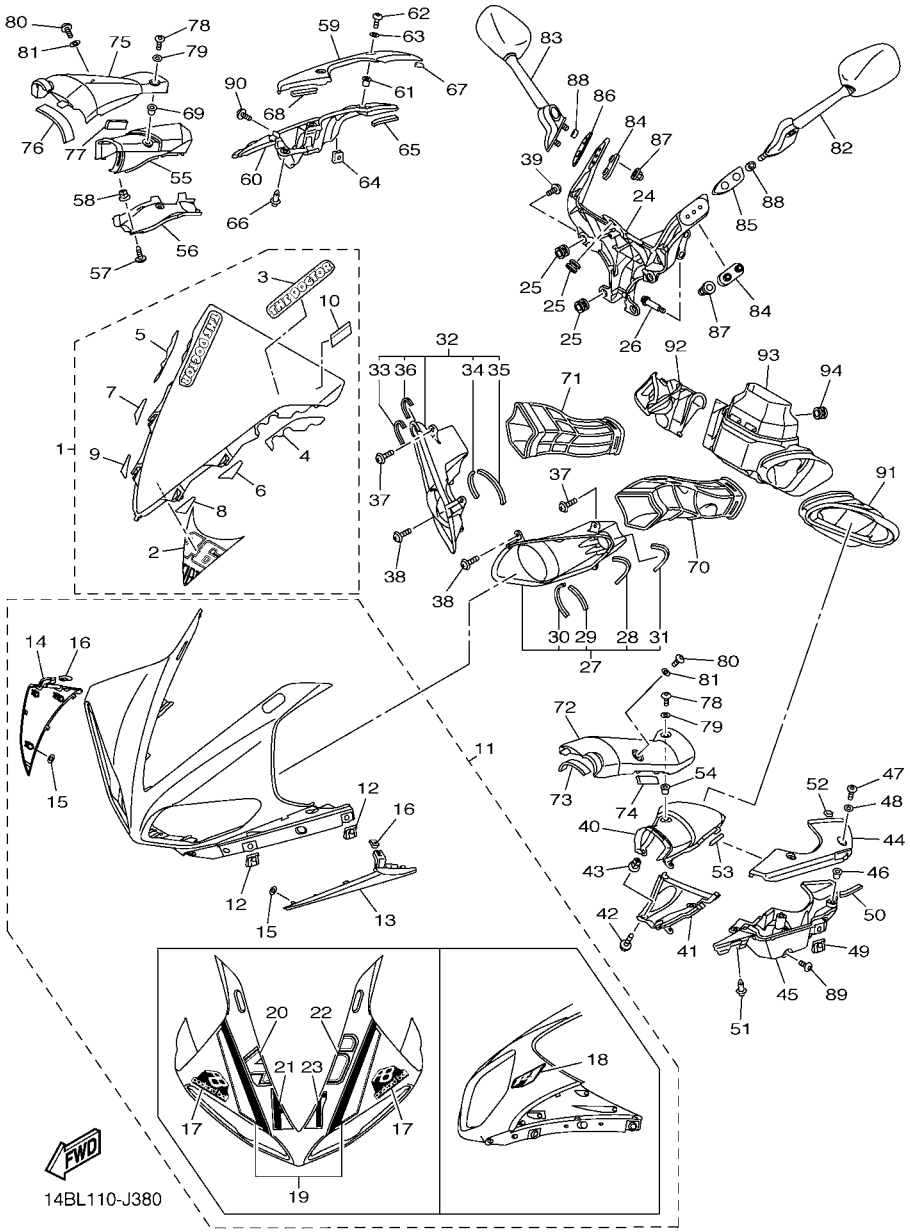

FIG. 38 COWLING 1

REF. NO.	PART NO.	DESCRIPTION	14BL	14BM				REMARKS
82	14B–26280–00	REAR VIEW MIRROR ASSY (LEFT)	1	1				
83	14B–26290–00	REAR VIEW MIRROR ASSY (RIGHT)	1	1				
84	4C8–26298–00	PLATE, MIRROR FITTING 1	2	2				
85	14B–2628N–00	BASE, MIRROR (LEFT)	1	1				
86	14B–2628R–00	BASE, MIRROR (RIGHT)	1	1				
87	90176–06055	NUT, CROWN	4	4				
88	90387–064T3	COLLAR	4	4				
89	90111–05034	BOLT,HEX. SOCKET BUTTON	2	2				
90	90111–05034	BOLT,HEX. SOCKET BUTTON	2	2				
91	14B–2846C–00	BOX, SIDE 1	1	1				
92	14B–2846D–00	BOX, SIDE 2	1	1				
93	14B–2845D–10	BOX, FRONT	1	1				
94	90480–13567	GROMMET	1	1				

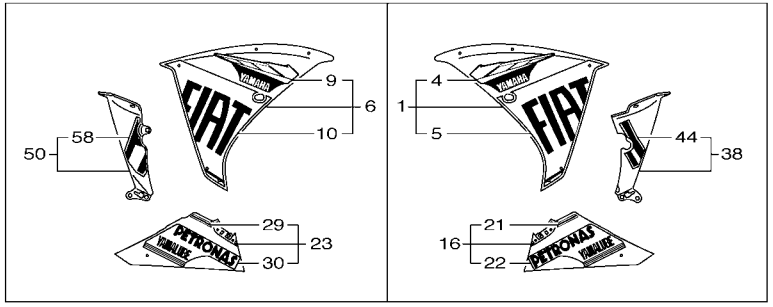

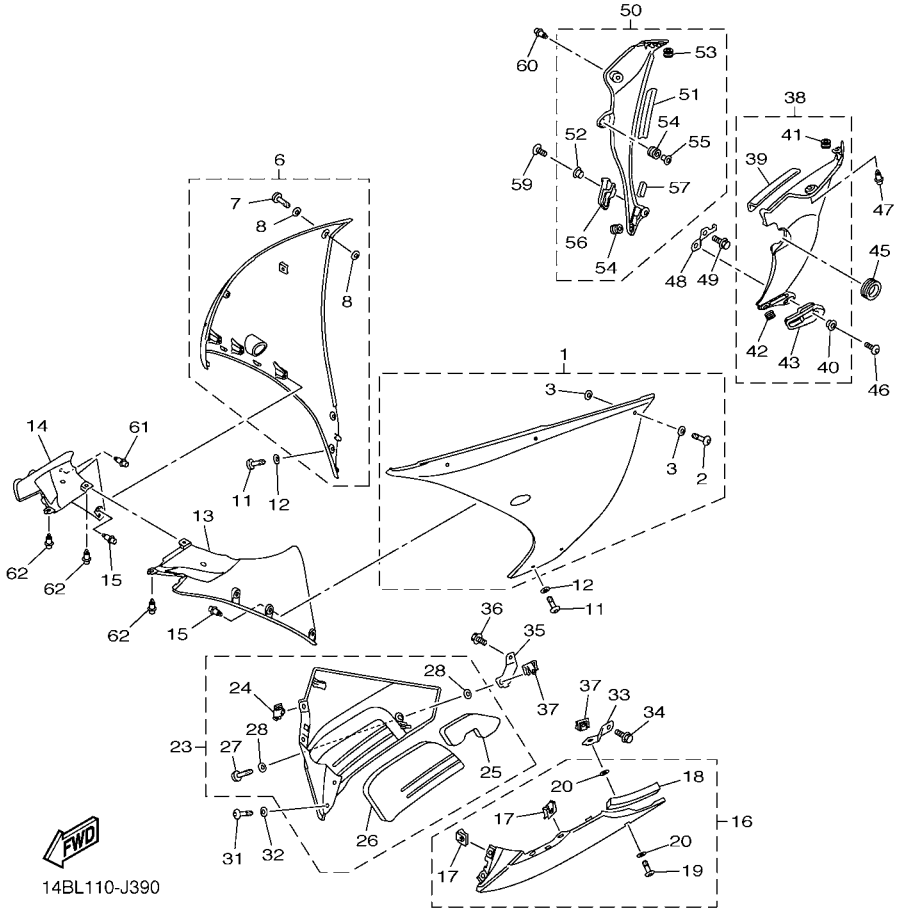

FIG. 39 COWLING 2

REF. NO.	PART NO.	DESCRIPTION	14BL	14BM				REMARKS
1	14B–Y283U–N0–P2	PANEL ASSEMBLY 1	1	1				DPBMC
2	14B–28386–00	.HEAD	3	3				
3	90202–06004	.WASHER, PLATE	6	6				
4	14B–283B5–00	.GRAPHIC, 21	1	1				
5	14B–2836C–00	.EMBLEM	1	1				
6	14B–Y283V–N0–P2	PANEL ASSEMBLY 2	1	1				DPBMC
7	14B–28386–00	.HEAD	3	3				
8	90202–06004	.WASHER, PLATE	6	6				
9	14B–283B6–00	.GRAPHIC, 22	1	1				
10	14B–2837C–00	.EMBLEM	1	1				
11	14B–28386–00	HEAD	4	4				
12	90202–06004	WASHER, PLATE	4	4				
13	14B–2836K–00	PANEL, INNER 1	1	1				
14	14B–2836L–00	PANEL, INNER 2	1	1				
15	90269–06008	RIVET	6	6				
16	14B–Y2808–L0–P1	COVER ASSY, UNDER	1	1				BWC1
17	5PW–2177L–00	.PLATE, SPRING	4	4				
18	14B–2834E–00	.DAMPER 3	1	1				
19	14B–28386–00	.HEAD	1	1				
20	90202–06004	.WASHER, PLATE	2	2				
21	14B–283A1–00	.GRAPHIC, UNDER COVER 1	1	1				
22	14B–283A3–00	.GRAPHIC, UNDER COVER 3	1	1				
23	14B–Y2809–L0–P1	COVER ASSY 2, UNDER	1	1				BWC1
24	5PW–2177L–00	.PLATE, SPRING	2	2				
25	14B–28371–00	.DAMPER	1	1				
26	14B–2848M–00	.SEAT 4	1	1				
27	14B–28386–00	.HEAD	1	1				

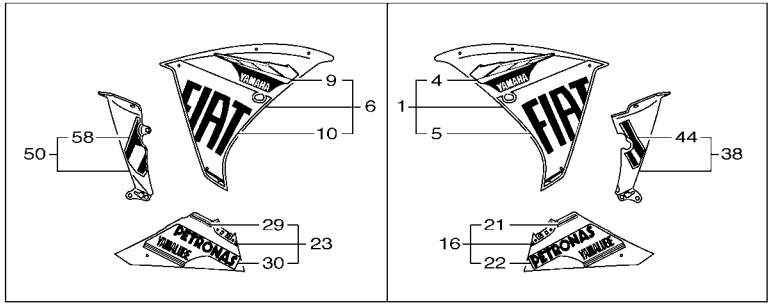

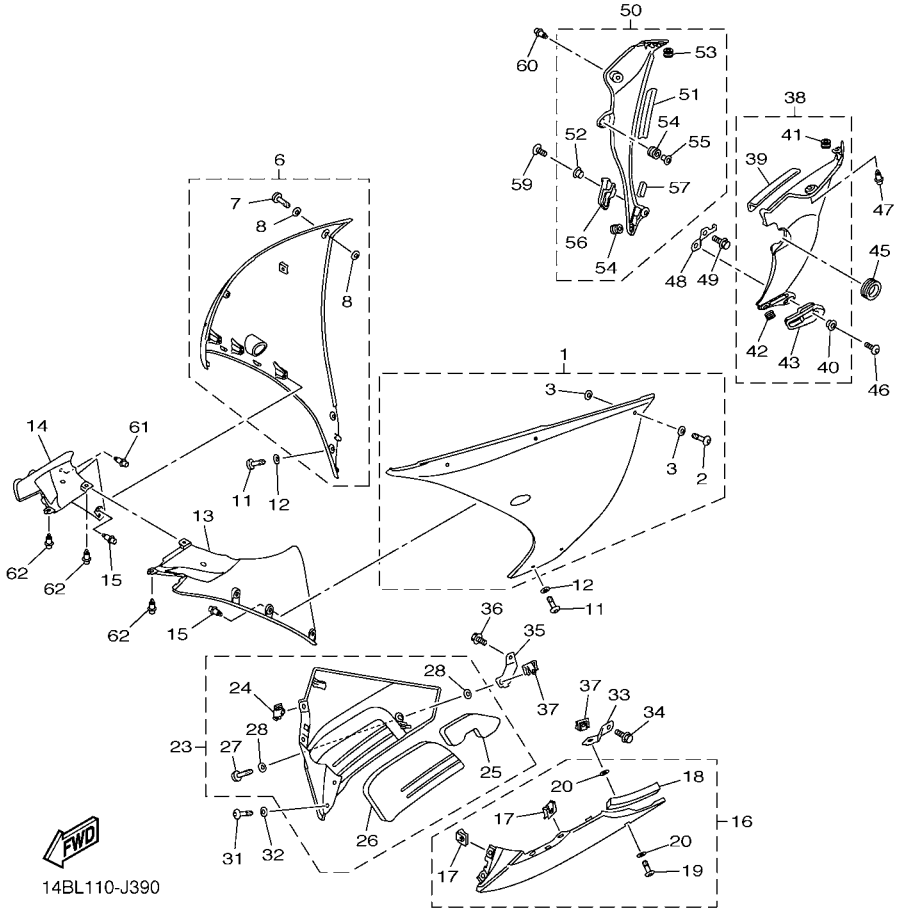

FIG. 39 COWLING 2

REF. NO.	PART NO.	DESCRIPTION	14BL	14BM				REMARKS
28	90202–06004	.WASHER, PLATE	2	2				
29	14B–283A2–00	.GRAPHIC, UNDER COVER 2	1	1				
30	14B–283A4–00	.GRAPHIC, UNDER COVER 4	1	1				
31	14B–28386–00	HEAD	2	2				
32	90202–06004	WASHER, PLATE	2	2				
33	14B–2836A–00	BRACKET 1	1	1				
34	95802–06016	BOLT, FLANGE	1	1				
35	14B–2836E–00	BRACKET 2	1	1				
36	90105–06174	BOLT, FLANGE	1	1				
37	5PW–2177L–00	PLATE, SPRING	2	2				
38	14B–Y283S–60–P6	PANEL, INNER 3 ASSY	1	1				BWC1
39	90520–05011	.DAMPER, PLATE	1	1				
40	90560–08251	.SPACER	1	1				
41	90480–08006	.GROMMET	1	1				
42	90480–12596	.GROMMET	1	1				
43	14B–283C1–00	.STOPPER, RUBBER 1	1	1				
44	14B–283BT–00	.GRAPHIC 42	1	1				
45	14B–2836T–00	DAMPER, LOCATING 1	1	1				
46	90111–06051	BOLT,HEX. SOCKET BUTTON	1	1				
47	90269–07077	RIVET	1	1				
48	14B–28321–00	STAY 1	1	1				
49	95802–06012	BOLT, FLANGE	1	1				
50	14B–Y28AH–60–P6	PANEL, INNER 4 ASSY	1	1				BWC1
51	3NU–21732–00	.SEAL 1	1	1				
52	90560–08251	.SPACER	1	1				
53	90480–08006	.GROMMET	1	1				
54	90480–12596	.GROMMET	2	2				

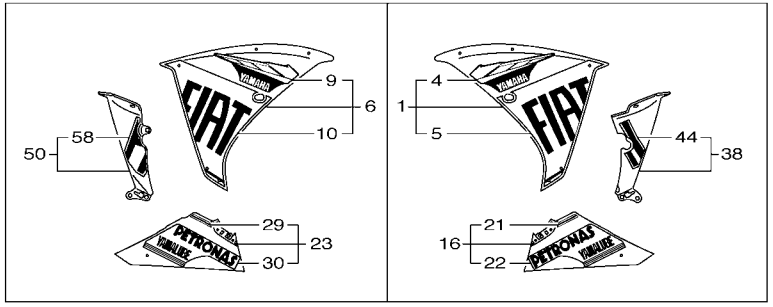

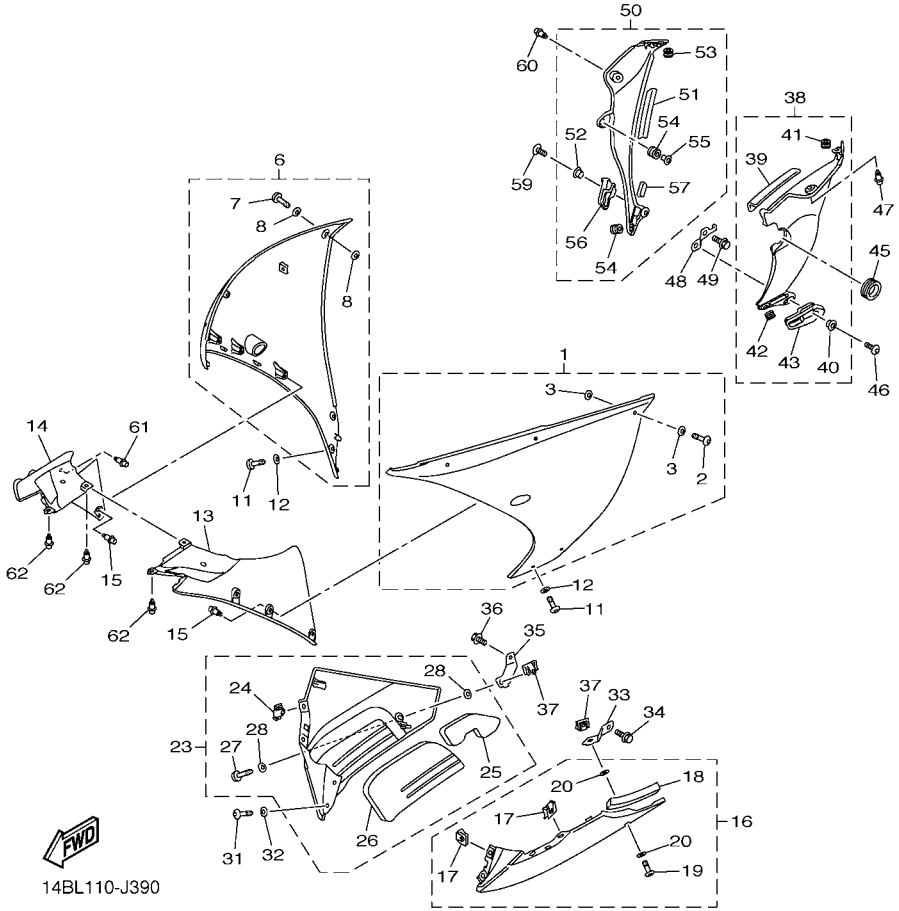

FIG. 39 COWLING 2

REF. NO.	PART NO.	DESCRIPTION	14BL	14BM				REMARKS
55	90387–065J6	.COLLAR	1	1				
56	14B–283C2–00	.STOPPER, RUBBER 2	1	1				
57	4B5–2847F–00	.SEAL 5	1	1				
58	14B–283BU–00	.GRAPHIC 43	1	1				
59	90111–06051	BOLT,HEX. SOCKET BUTTON	2	2				
60	90269–07077	RIVET	1	1				
61	90269–06008	RIVET	1	1				
62	90269–06008	RIVET	3	3				

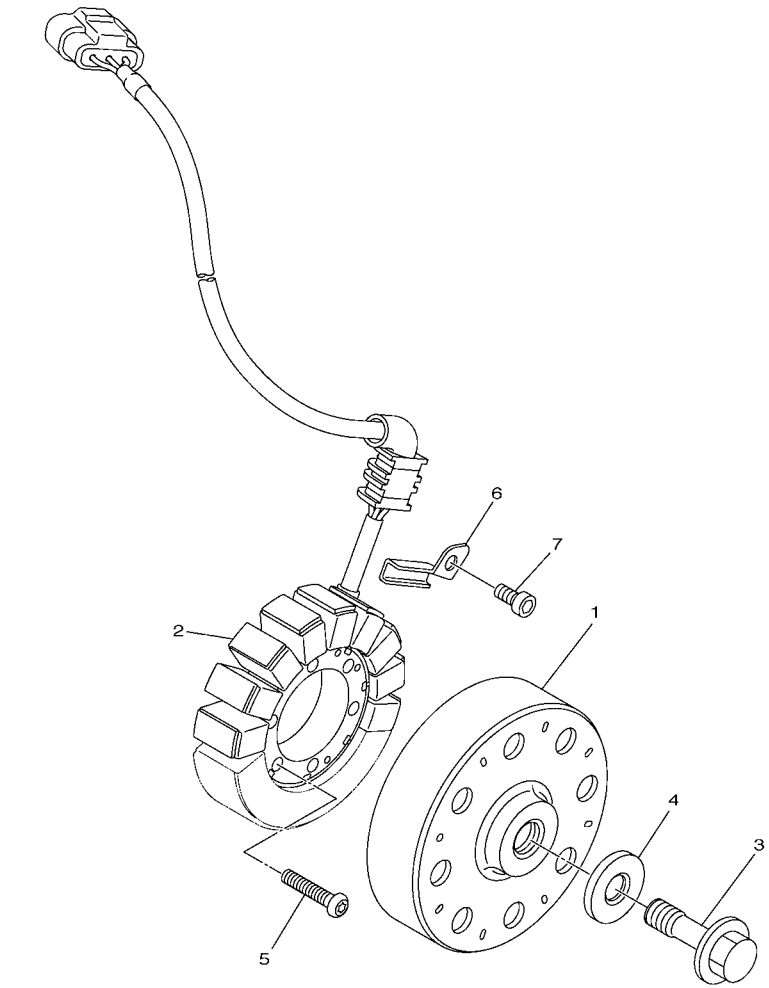

14B1300-H400

FIG. 40 GENERATOR

REF. NO.	PART NO.	DESCRIPTION	14BL	14BM				REMARKS
1	14B–81450–00	ROTOR ASSY	1	1				
2	14B–81410–00	STATOR ASSY	1	1				
3	90105–126A8	BOLT, FLANGE	1	1				
4	90201–12008	WASHER, PLATE	1	1				
5	90149–06128	SCREW	3	3				
6	14B–15484–00	CLAMP 2	1	1				
7	90110–06182	BOLT, HEXAGON SOCKET HEAD	1	1				

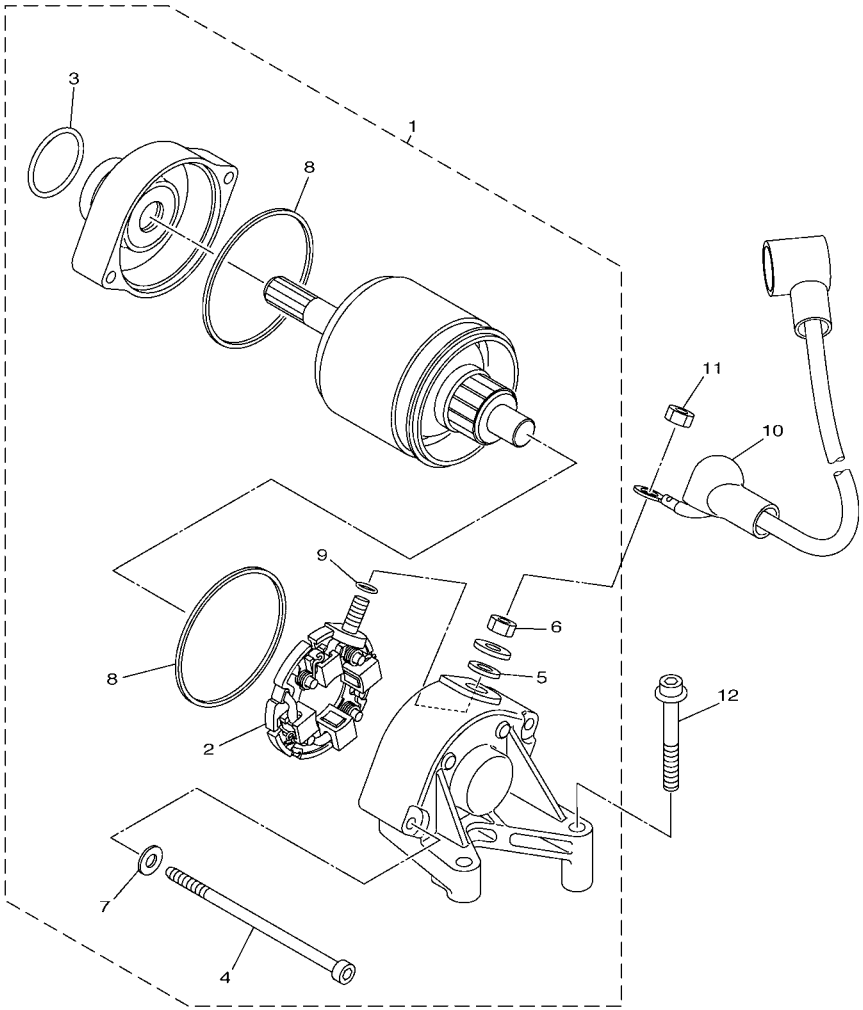

14B1300-H410

FIG. 41 STARTING MOTOR

REF. NO.	PART NO.	DESCRIPTION	14BL	14BM				REMARKS
1	14B–81890–00	MOTOR ASSY	1	1				
2	4C8–81801–01	.BRUSH SET	1	1				
3	93210–25711	.O-RING	1	1				
4	4C8–81846–00	.SCREW	2	2				
5	8FA–8181L–00	.WASHER, PLAIN	1	1				
6	95302–06700	.NUT	1	1				
7	90201–05021	.WASHER, PLATE	2	2				
8	4C8–81861–00	.GASKET	2	2				
9	93210–06001	.O-RING	1	1				
10	14B–8183G–01	CORD COMP.	1	1				
11	95302–06700	NUT	1	1				
12	90109–06016	BOLT	2	2				

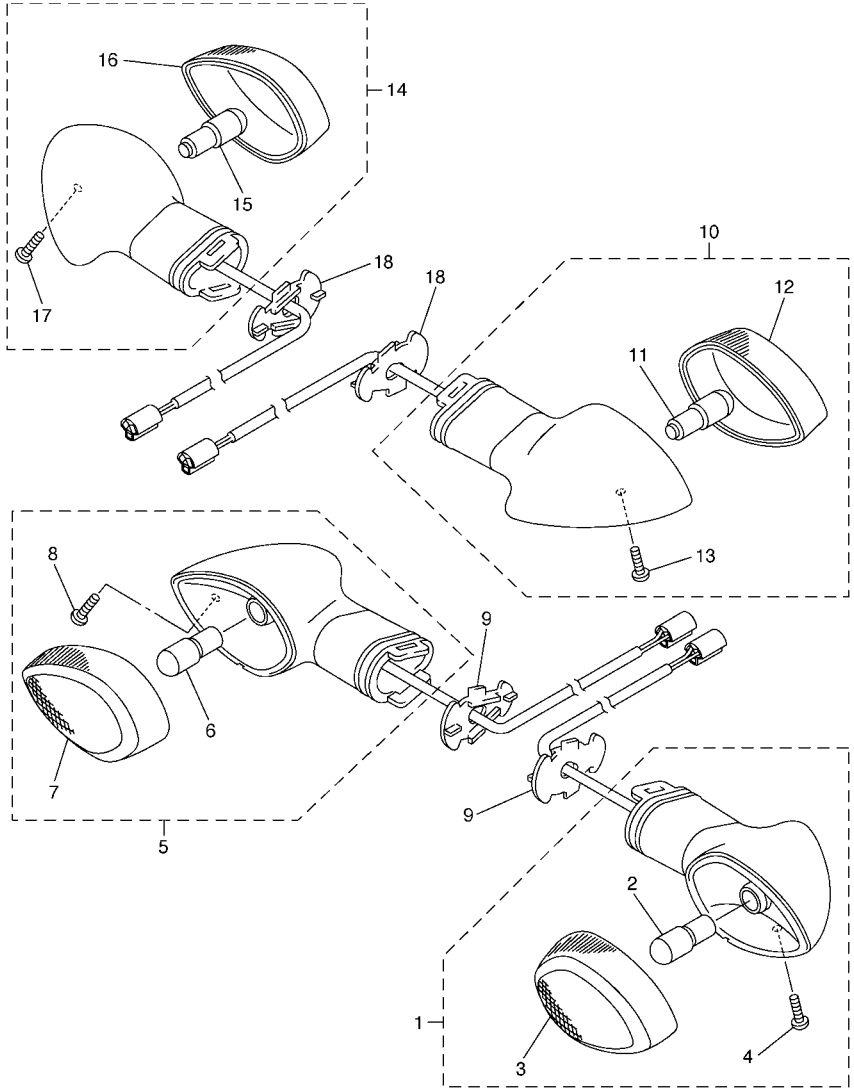

2C05100-E410

FIG. 42 FLASHER LIGHT

REF. NO.	PART NO.	DESCRIPTION	14BL	14BM				REMARKS
1	5PW–83310–10	FRONT FLASHER LIGHT ASSY 1	1	1				
2	5GJ–83331–00	.BULB, FLASHER(12V-21/5W T20)	1	1				
3	5PW–8333A–10	.LENS COMP 1	1	1				
4	97706–04012	.SCREW, TAPPING	1	1				
5	5PW–83320–10	FRONT FLASHER LIGHT ASSY 2	1	1				
6	5GJ–83331–00	.BULB, FLASHER(12V-21/5W T20)	1	1				
7	5PW–8334A–10	.LENS COMP 2	1	1				
8	97706–04012	.SCREW, TAPPING	1	1				
9	2C0–83318–00	STAY, FLASHER 1	2	2				
10	14B–83330–10	REAR FLASHER LIGHT ASSY 1	1	1				
11	5PW–83331–00	.BULB (12V-21/5W T20)	1	1				
12	5PW–8334A–10	.LENS COMP 2	1	1				
13	97707–04012	.SCREW, TAPPING	1	1				
14	14B–83340–10	REAR FLASHER LIGHT ASSY 2	1	1				
15	5PW–83331–00	.BULB (12V-21/5W T20)	1	1				
16	5PW–8333A–10	.LENS COMP 1	1	1				
17	97707–04012	.SCREW, TAPPING	1	1				
18	2C0–83318–00	STAY, FLASHER 1	2	2				

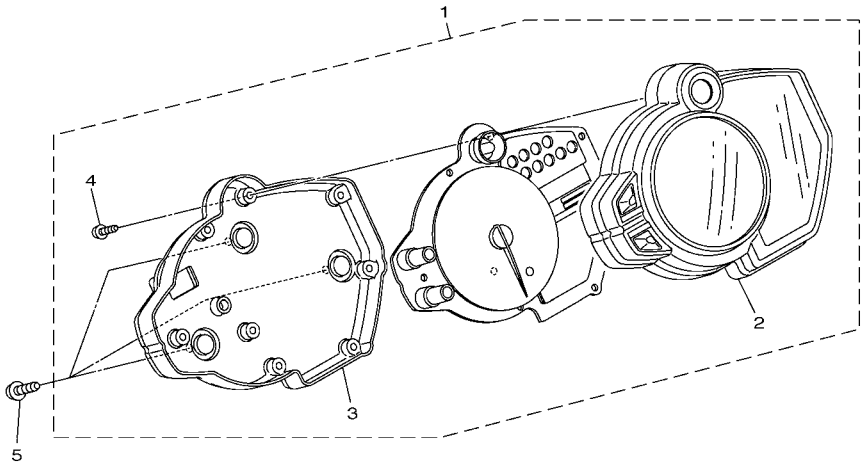

14B1300-H430

FIG. 43 METER

REF. NO.	PART NO.	DESCRIPTION	14BL	14BM				REMARKS
1	14B–83500–21	METER ASSY (MPH)	1	1				
2	14B–8353E–00	.CASE, METER UPPER	1	1				
3	14B–83572–00	.CASE, SPEEDOMETER LOWER	1	1				
4	5PW–8352S–00	.SCREW, PANEL FTTING	8	8				
5	90160–05006	SCREW, ROUND TAPPING	3	3				

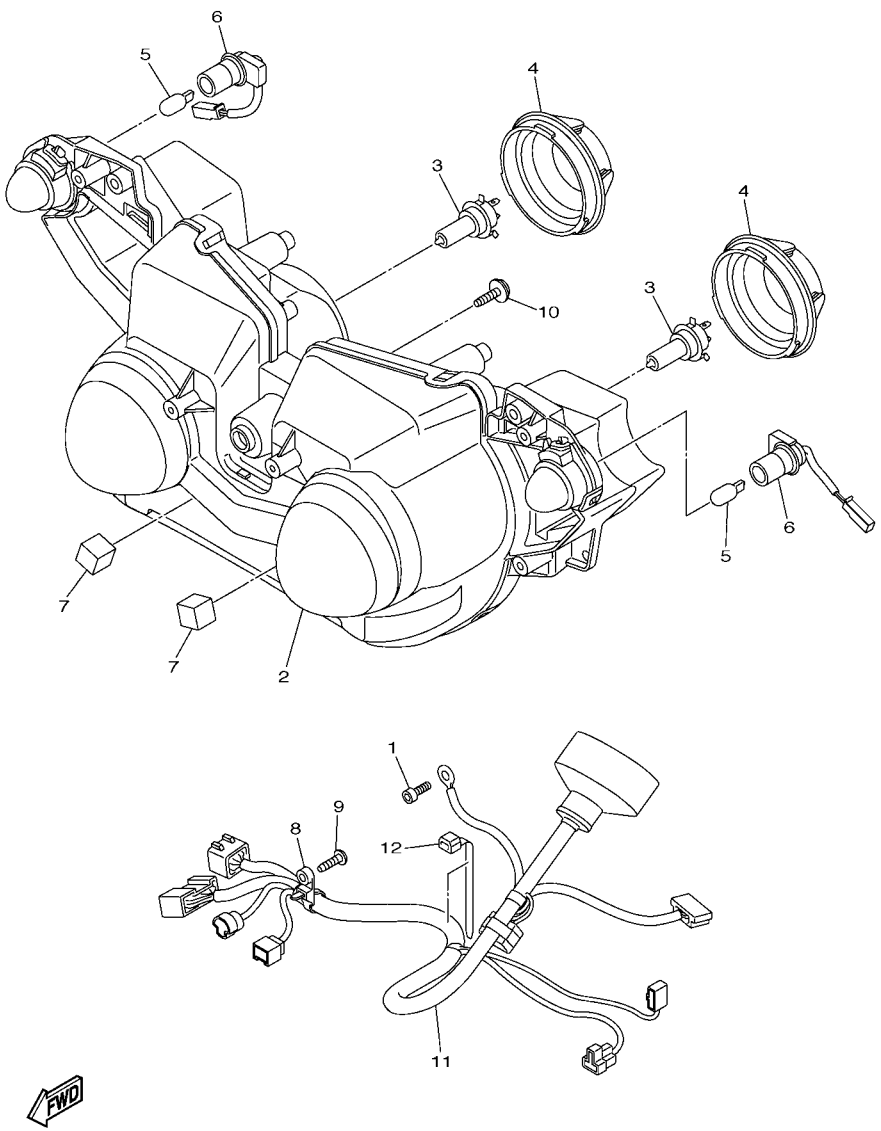

14B1300-H440

FIG. 44 HEADLIGHT

REF. NO.	PART NO.	DESCRIPTION	14BL	14BM				REMARKS
1	91317–05012	BOLT	1	1				
2	14B–84303–01	HEADLIGHT UNIT ASSY	1	1				
3	5PS–84314–00	BULB (12V-55W H7)	2	2				HALOGEN
4	14B–84396–00	COVER	2	2				
5	5DM–84347–00	BULB (12V-5W)	2	2				
6	14B–84312–00	CORD ASSY	2	2				
7	14B–2836U–00	DAMPER, LOCATING 2	2	2				
8	90464–47002	CLAMP	1	1				
9	97702–50016	SCREW, TAPPING	1	1				
10	90160–05007	SCREW, ROUND TAPPING	5	5				
11	14B–84359–10	CORD, HEADLIGHT	1	1				
12	90464–15195	CLAMP	1	1				

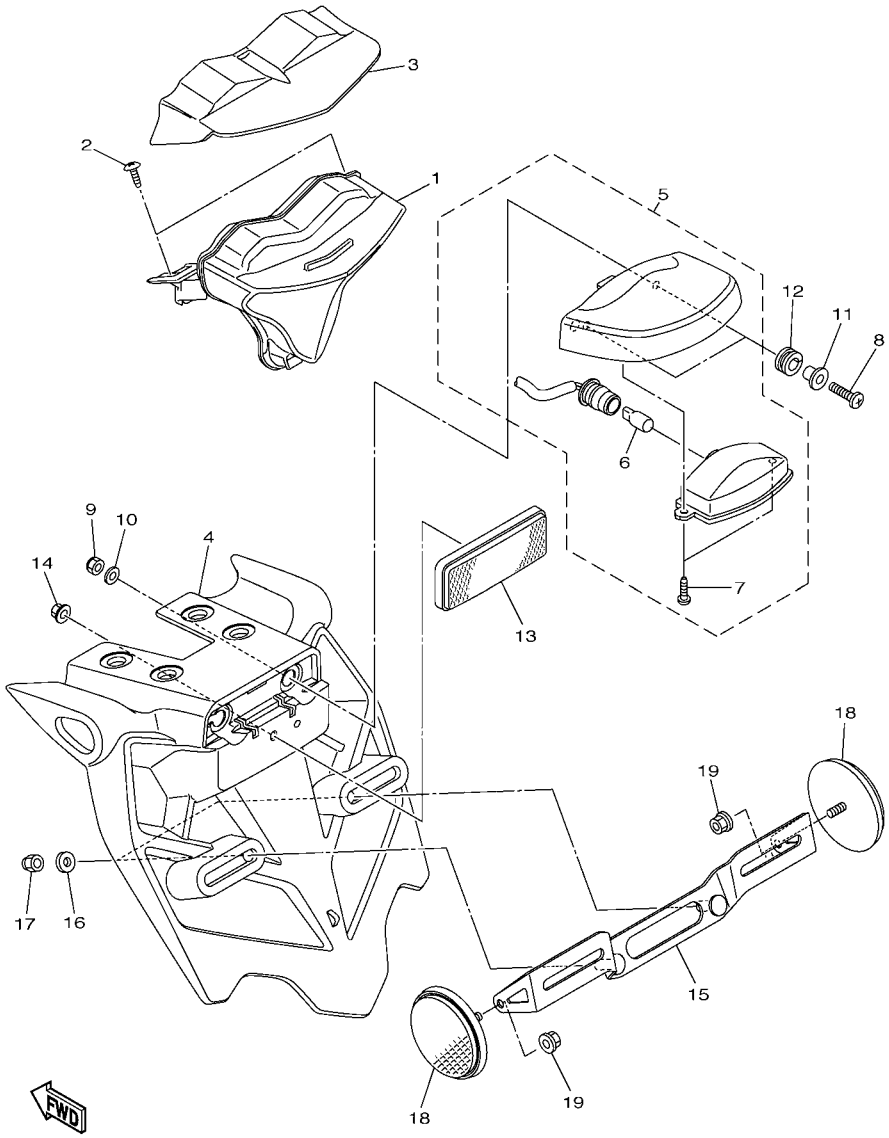

FIG. 45 TAILLIGHT

REF. NO.	PART NO.	DESCRIPTION	14BL	14BM				REMARKS
1	14B–84710–10	TAILLIGHT UNIT ASSY	1	1				
2	97702–50014	SCREW, TAPPING	2	2				
3	14B–84516–00	COVER, TAILLIGHT	1	1				
4	14B–21629–00	GUARD, MUD	1	1				
5	5VX–84745–01	LICENCE LIGHT UNIT ASSY	1	1				
6	4HC–84744–00	.BULB (12V-5W)	1	1				
7	97706–04012	.SCREW, TAPPING	2	2				
8	98902–05020	SCREW, BIND	2	2				
9	95602–05100	NUT, U	2	2				
10	92907–05200	WASHER	2	2				
11	90387–05003	COLLAR	2	2				
12	90480–11009	GROMMET	2	2				
13	3Y6–85130–02	REAR REFLECTOR ASSY	1	1				
14	95607–05200	NUT, U FLANGE	1	1				
15	14B–84751–00	BRACKET, LICENSE	1	1				
16	92902–06600	WASHER, PLATE	2	2				
17	95607–06100	NUT, U	2	2				
18	449–85131–02	REFLECTOR, REAR 1	2	2				
19	95707–05500	NUT, FLANGE	2	2				

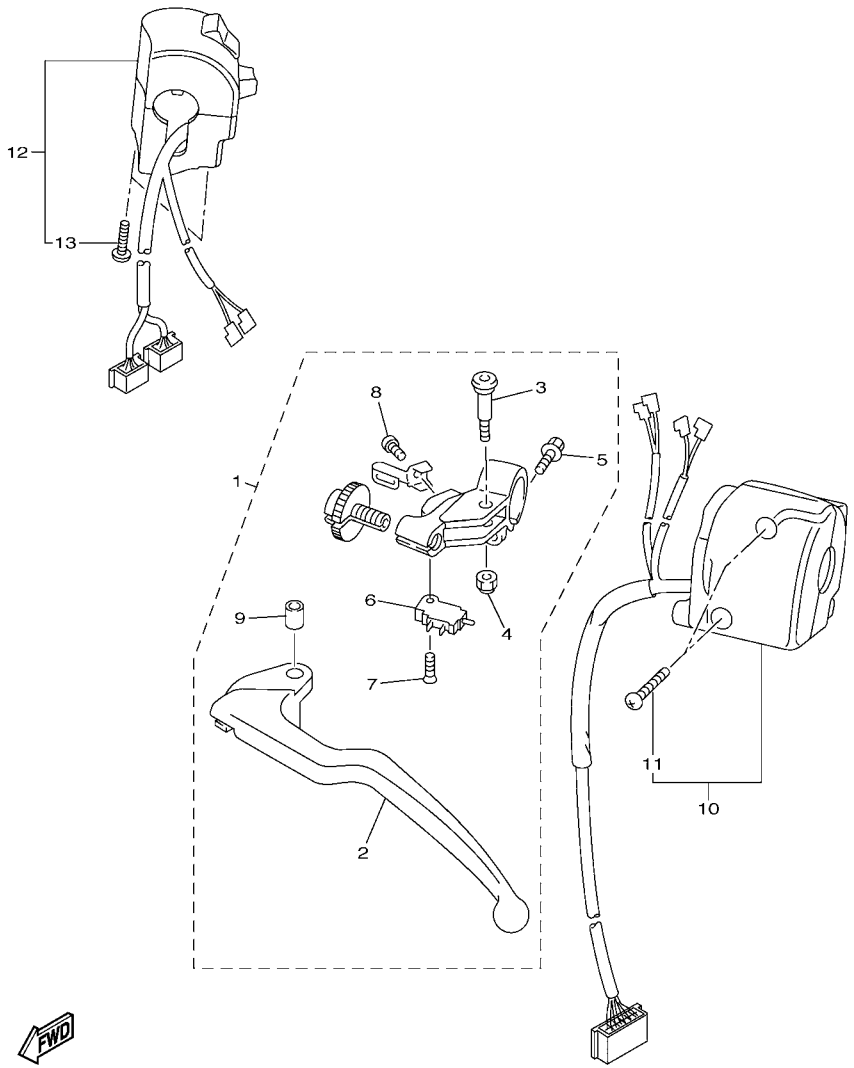

14B4110-H460

FIG. 46 HANDLE SWITCH & LEVER

REF. NO.	PART NO.	DESCRIPTION	14BL	14BM				REMARKS
1	2C0–82910–01	LEVER HOLDER ASSY (LEFT)	1	1				
2	5EB–83912–03	.LEVER 1	1	1				
3	2C0–83945–00	.BOLT, LEVER	1	1				
4	95607–06200	.NUT, SELF U-FLANGE	1	1				
5	95027–06020	.BOLT, FLANGE	1	1				
6	4XV–82917–01	.SWITCH	1	1				
7	98707–03016	.SCREW, FLAT HEAD	1	1				
8	98507–04010	.SCREW, PAN HEAD	1	1				
9	5JJ–83913–00	.COLLAR, LEVER 1	1	1				
10	14B–83973–10	SWITCH, HANDLE 3	1	1				
11	98507–05025	.SCREW, PAN HEAD	2	2				
12	14B–83963–00	SWITCH, HANDLE 3 (RIGHT)	1	1				
13	98507–05045	.SCREW, PAN HEAD	2	2				

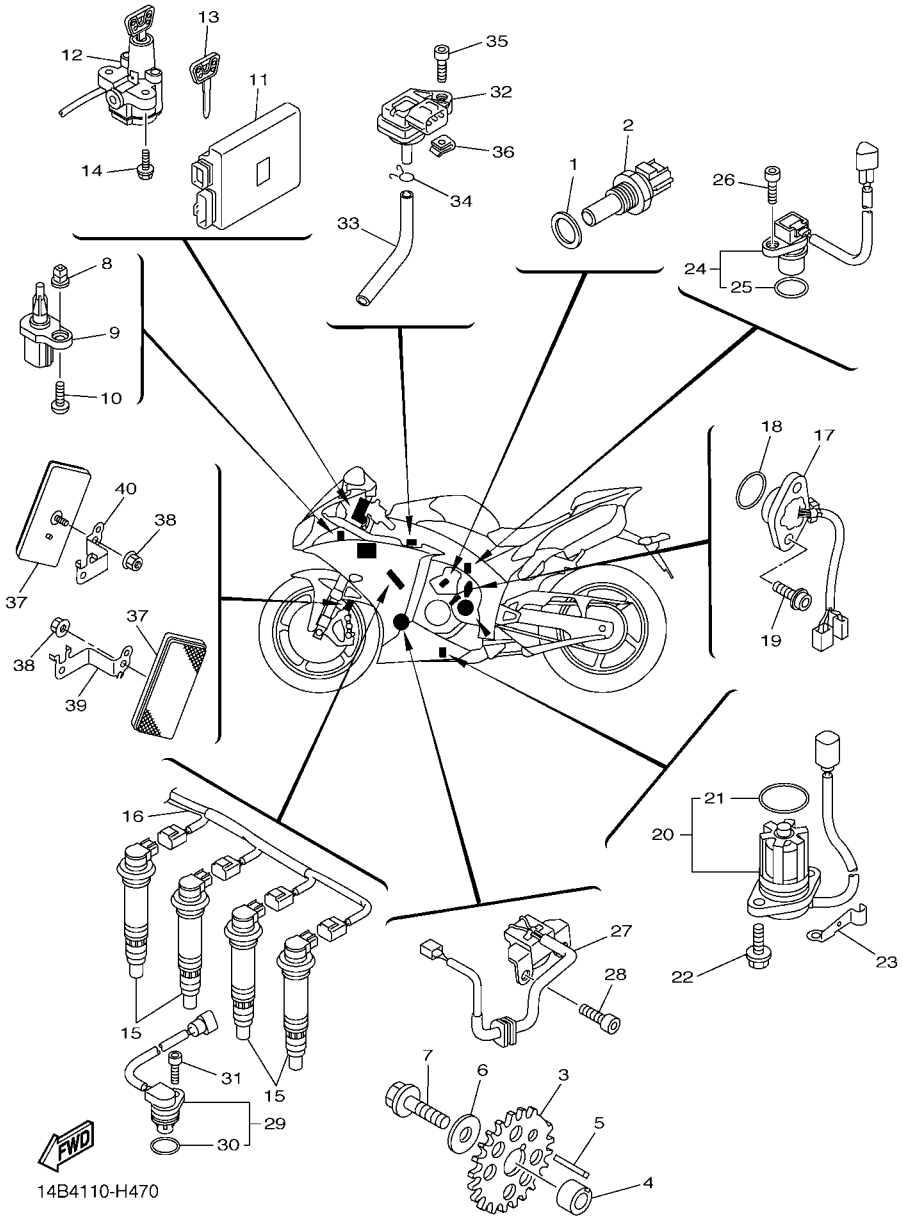

FIG. 47 ELECTRICAL 1

REF. NO.	PART NO.	DESCRIPTION	14BL	14BM				REMARKS
1	90201–12790	WASHER, PLATE	1	1				
2	8CC–85790–01	THERMOSENSOR ASSY	1	1				
3	14B–81673–00	ROTOR	1	1				
4	90387–11006	COLLAR	1	1				
5	90282–03005	KEY, STRAIGHT	1	1				
6	90201–10034	WASHER, PLATE	1	1				
7	90105–10290	BOLT, FLANGE	1	1				
8	90480–08005	GROMMET	1	1				
9	8FP–85886–00	SENSOR, AIR TEMPERATURE	1	1				
10	97702–50016	SCREW, TAPPING	1	1				
11	14B–8591A–20	ENGINE CONTROL UNIT ASSY	1	1				
12	14B–82501–40	MAIN SWITCH STEERING LOCK	1	1				
13	4BH–82511–09	BLANK KEY	1	1				AP
14	90109–080G5	BOLT	2	2				
15	14B–82310–00	IGNITION COIL ASSY	4	4				
16	14B–82309–00	WIRE, SUB LEAD	1	1				
17	14B–82540–00	NEUTRAL SWITCH ASSY	1	1				
18	93210–21001	O-RING	1	1				
19	90110–05063	BOLT, HEXAGON SOCKET HEAD	2	2				
20	14B–85720–00	OIL LEVEL GAUGE ASSY	1	1				
21	5VY–8A8E0–00	.O-RING	1	1				
22	95022–06016	BOLT, FLANGE	2	2				
23	90465–08053	CLAMP	1	1				
24	14B–83755–00	SENSOR, SPEED	1	1				
25	4D9–81168–00	.O-RING	1	1				
26	90110–06161	BOLT, HEXAGON SOCKET HEAD	1	1				
27	14B–81670–00	PICK-UP ASSY	1	1				

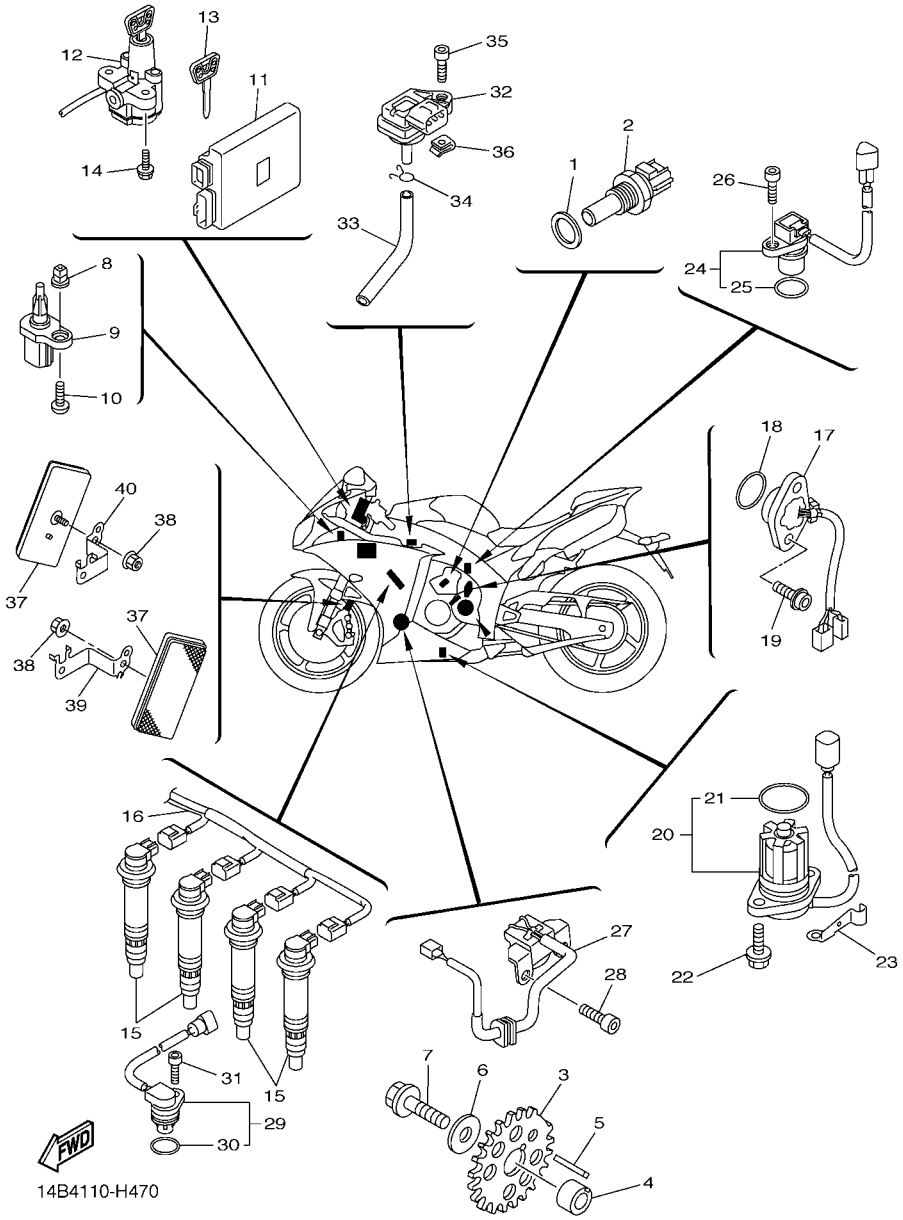

FIG. 47 ELECTRICAL 1

REF. NO.	PART NO.	DESCRIPTION	14BL	14BM				REMARKS
28	90110–06168	BOLT, HEXAGON SOCKET HEAD	2	2				
29	5VY–85896–00	SENSOR, CAM POSITION	1	1				
30	4D9–81168–00	.O-RING	1	1				
31	90110–06175	BOLT, HEXAGON SOCKET HEAD	1	1				
32	2C0–82380–00	SENSOR, PRESSURE	1	1				
33	90445–08028	HOSE	1	1				
34	90467–08021	CLIP	1	1				
35	91312–05020	BOLT	1	1				
36	90183–05076	NUT, SPRING	1	1				
37	11H–85110–01	REFLECTOR ASSY	2	2				
38	95707–05500	NUT, FLANGE	2	2				
39	14B–85112–00	BRACKET, REFLECTOR 1	1	1				
40	14B–85122–00	BRACKET, REFLECTOR 2	1	1				

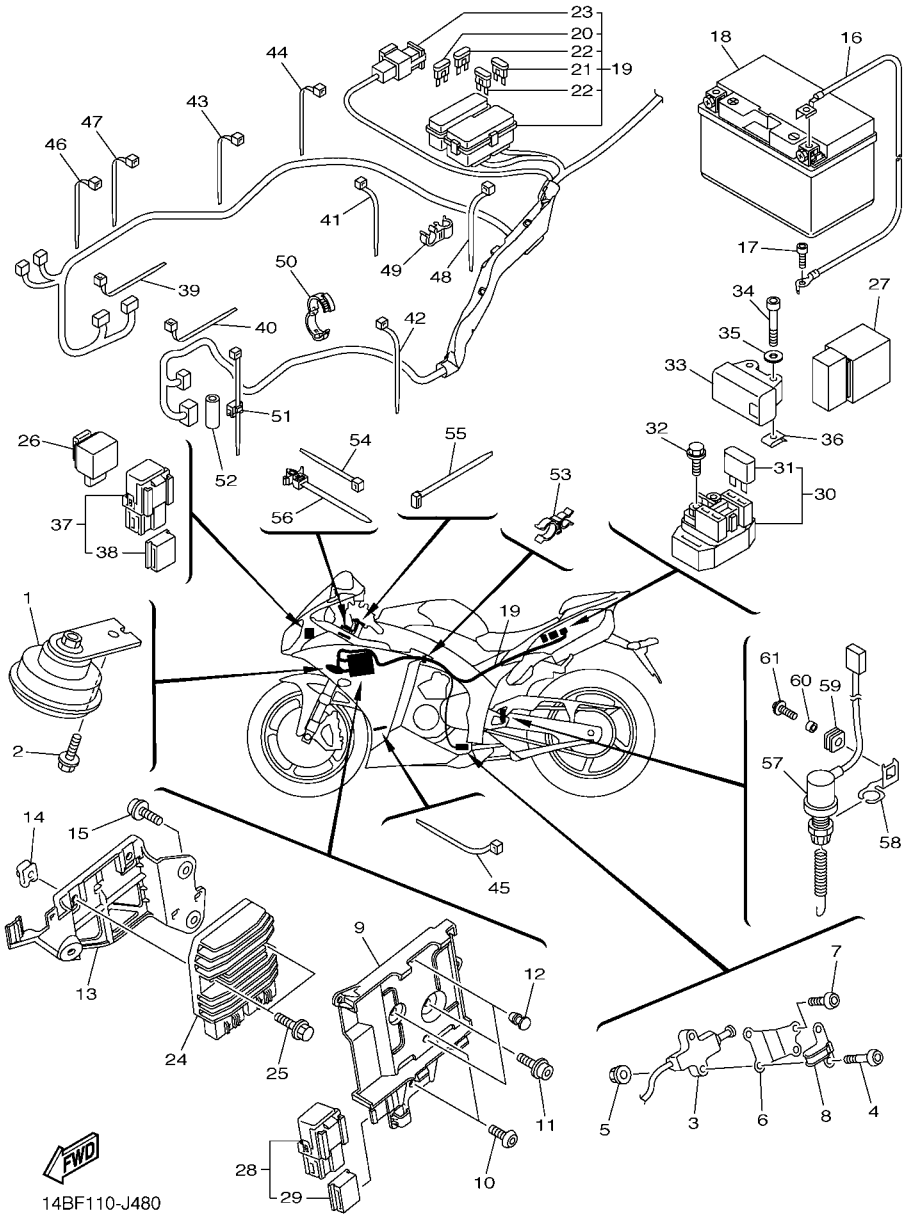

FIG. 48 ELECTRICAL 2

REF. NO.	PART NO.	DESCRIPTION	14BL	14BM				REMARKS
1	14B–83371–00	HORN	1	1				
2	95807–06012	BOLT, FLANGE	1	1				
3	13S–82566–50	SWITCH, SIDE STAND	1	1				
4	92017–05025	BOLT, BUTTON HEAD	2	2				
5	95607–05200	NUT, U FLANGE	2	2				
6	14B–27961–00	BRACKET, SENSOR 1	1	1				
7	92017–05016	BOLT, BUTTON HEAD	2	2				
8	14B–27911–00	HOLDER	1	1				
9	14B–2836H–00	BRACKET 5	1	1				
10	90111–06119	BOLT,HEX. SOCKET BUTTON	2	2				
11	90110–06245	BOLT, HEXAGON SOCKET HEAD	1	1				
12	90338–06018	PLUG	2	2				
13	14B–2836J–00	BRACKET 6	1	1				
14	90183–06069	NUT, SPRING	2	2				
15	90110–06245	BOLT, HEXAGON SOCKET HEAD	2	2				
16	14B–82116–00	WIRE, MINUS LEAD	1	1				
17	91312–06012	BOLT	1	1				
18	5VY–82100–00	BATTERY ASSY (YUASA YTZ10S)	1	1				
19	14B–82590–12	WIRE HARNESS ASSY	1	1				
20	5JJ–82151–20	.FUSE (20A-BL)	2	2				
21	5JJ–82151–10	.FUSE (15A-BL)	4	4				
22	5JJ–82151–00	.FUSE (7.5A-BL)	5	5				
23	5JW–82151–10	.FUSE (50A)	1	1				
24	1D7–81960–00	RECTIFIER & REGULATOR ASSY	1	1				
25	90105–06148	BOLT, FLANGE	2	2				
26	4MY–83350–01	FLASHER RELAY ASSY	1	1				
27	5VK–81950–40	RELAY ASSY	1	1				

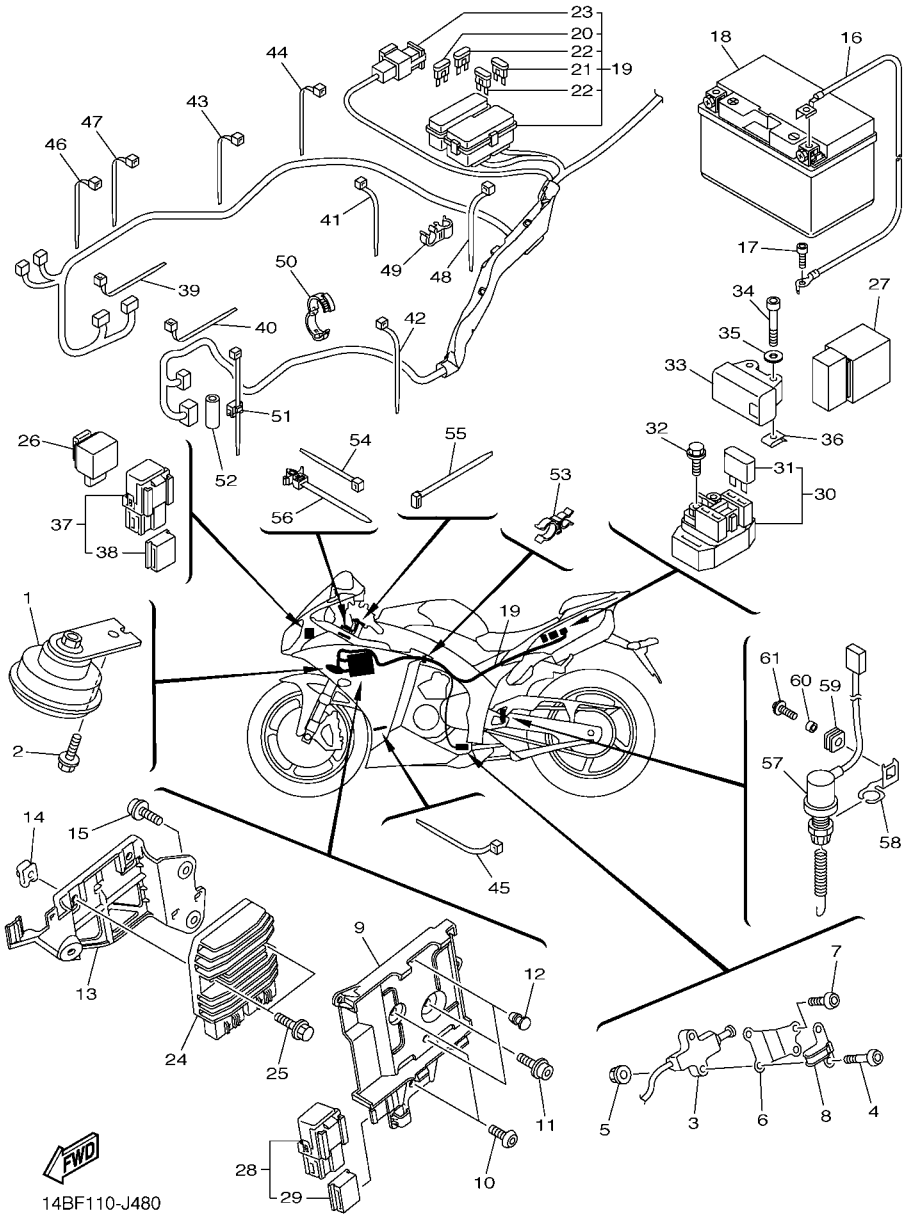

FIG. 48 ELECTRICAL 2

REF. NO.	PART NO.	DESCRIPTION	14BL	14BM				REMARKS
28	5JJ–81950–20	RELAY ASSY	1	1				
29	5JJ–81952–00	.HOLDER, RELAY	1	1				
30	5JW–81940–02	STARTER RELAY ASSY	1	1				
31	36Y–82151–00	.FUSE (15A-BL)	2	2				
32	95022–06008	BOLT, FLANGE	2	2				
33	5VU–82576–01	SENSOR, LEAN ANGLE	1	1				
34	91312–04025	BOLT	2	2				
35	90201–047A2	WASHER, PLATE	2	2				
36	90183–04039	NUT, SPRING	2	2				
37	5JJ–81950–20	RELAY ASSY	1	1				
38	5JJ–81952–00	.HOLDER, RELAY	1	1				
39	90464–13073	CLAMP	1	1				
40	90464–13073	CLAMP	1	1				
41	90465–13M11	CLAMP	1	1				
42	90464–16061	CLAMP	1	1				
43	90464–16061	CLAMP	1	1				
44	90464–13077	CLAMP	1	1				
45	90464–13073	CLAMP	1	1				
46	90464–13073	CLAMP	1	1				
47	90464–13077	CLAMP	1	1				
48	90464–13077	CLAMP	1	1				
49	90464–12009	CLAMP	1	1				
50	90464–16001	CLAMP	2	2				
51	90464–36004	CLAMP	1	1				
52	90445–107A5	HOSE (L30)	1	1				
53	90464–21256	CLAMP	1	1				
54	90464–16061	CLAMP	1	1				

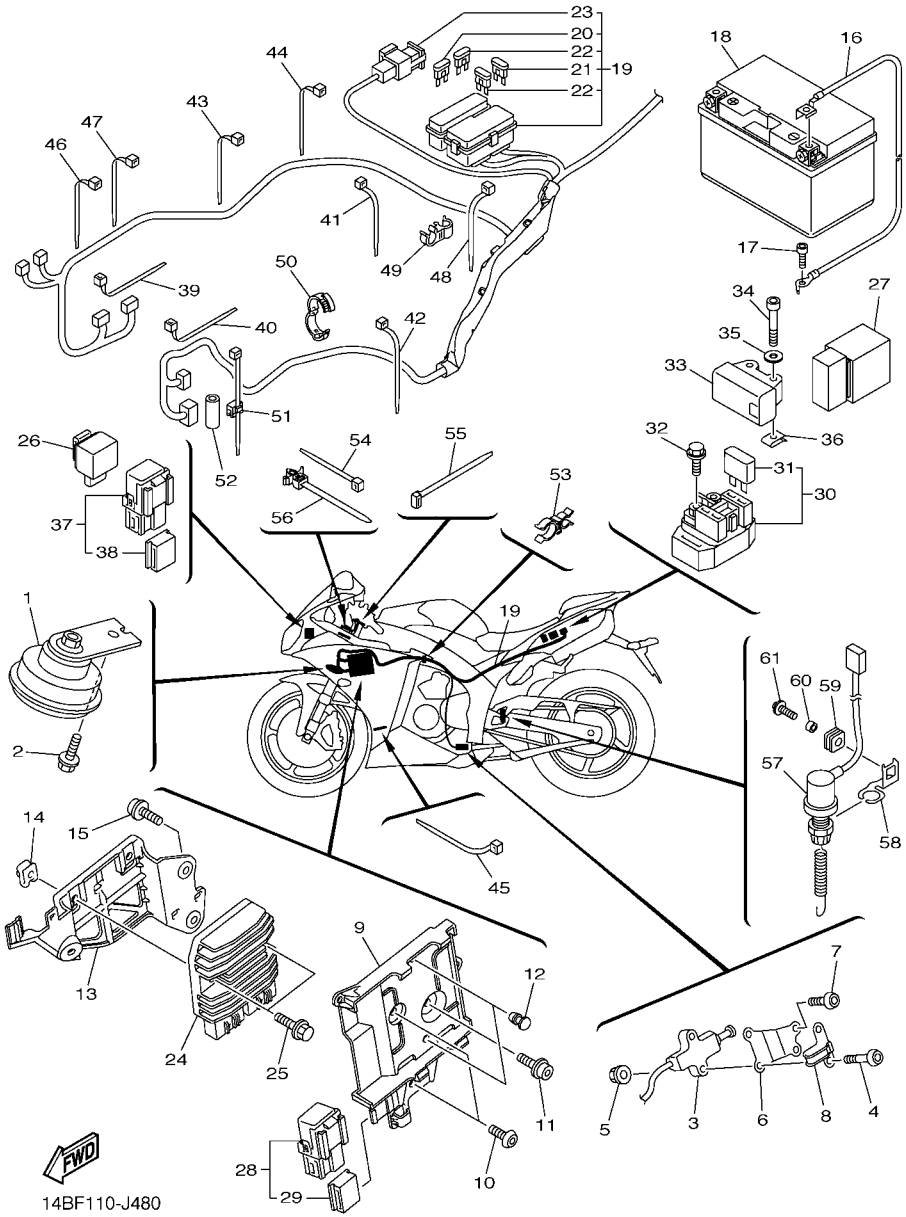

FIG. 48 ELECTRICAL 2

REF. NO.	PART NO.	DESCRIPTION	14BL	14BM				REMARKS
55	90464–59001	CLAMP	1	1				
56	90464–12089	CLAMP	1	1				
57	14B–82530–00	STOP SWITCH ASSY	1	1				
58	14B–2144G–00	STAY, STOP SWITCH	1	1				
59	90480–12607	GROMMET	1	1				
60	90387–06M16	COLLAR	1	1				
61	90159–06150	SCREW, WITH WASHER	1	1				

PART NO.	REF. NO.
14B–11101–00	1 – 1
5VY–1111G–00	1 – 29
14B–11133–10	1 – 2
4C8–11134–10	1 – 3
14B–11165–00	15 – 26
14B–11181–00	1 – 20
14B–11191–00	1 – 21
14B–11193–00	1 – 23
214–11198–01	9 – 8
14B–11311–00	2 – 1
14B–11351–00	2 – 2
14B–11400–00	3 – 1
14B–11413–00	3 – 12
14B–11413–10	3 – 12
14B–11413–20	3 – 12
14B–11413–30	3 – 12
14B–11413–40	3 – 12
14B–11413–50	3 – 12
14B–11413–A0	3 – 12
14B–11416–00	3 – 6
14B–11416–10	3 – 6
14B–11416–20	3 – 6
14B–11416–30	3 – 6
14B–11416–40	3 – 6
14B–11500–00	3 – 11
14B–11549–00	3 – 5
14B–11603–00	3 – 8
14B–11631–00	3 – 7
4C8–11633–00	3 – 9
14B–11650–00	3 – 2
5VY–11654–01	3 – 3
14B–11656–00	3 – 4
14B–11656–10	3 – 4
14B–11656–20	3 – 4
14B–11656–30	3 – 4
14B–12111–00	4 – 1
14B–12113–00	4 – 4
14B–12114–00	4 – 5
4C8–12116–00	4 – 3
4C8–12117–00	4 – 6
1AA–12118–00	4 – 8
1WG–12118–00	4 – 9
4TE–12119–00	4 – 11
14B–12121–00	4 – 2
4C8–12127–00	4 – 7
3P6–12129–00	4 – 10
4C8–12153–09	4 – 13
4C8–12153–20	4 – 13

PART NO.	REF. NO.
4C8–12153–30	4 – 13
3LD–12168–K1	4 – 12
3LD–12168–M1	4 – 12
3LD–12168–R1	4 – 12
3LD–12168–U1	4 – 12
3LD–12168–W1	4 – 12
3LD–12168–Y1	4 – 12
3LD–12169–11	4 – 12
3LD–12169–31	4 – 12
3LD–12169–50	4 – 12
3LD–12169–70	4 – 12
3LD–12169–90	4 – 12
3LD–12169–E0	4 – 12
3LD–12169–G0	4 – 12
3LD–12169–J0	4 – 12
3LD–12169–L0	4 – 12
3LD–12169–N0	4 – 12
3LD–12169–T0	4 – 12
14B–12170–00	5 – 1
14B–12176–00	5 – 3
14B–12180–00	5 – 2
14B–12210–00	5 – 6
14B–12213–00	5 – 7
5BE–12241–00	1 – 22
14B–12251–00	5 – 9
14B–12252–00	5 – 10
14B–12405–00	7 – 19
14B–12405–10	7 – 20
14B–12410–00	7 – 4
5LP–12411–00	7 – 5
14B–12420–00	6 – 1
14B–12422–00	6 – 7
4C8–12438–00	6 – 4
4XV–12439–00	6 – 6
14B–1243A–00	7 – 40
14B–1243E–00	7 – 42
14B–1243F–00	7 – 57
14B–1244G–00	7 – 45
14B–12450–00	6 – 5
14B–12461–00	7 – 18
5SL–12462–00	7 – 30
14B–12465–00	7 – 24
14B–12469–10	6 – 30
5GV–1246E–00	7 – 10
	7 – 28
14B–12481–00	6 – 21
14B–12482–00	7 – 14
14B–12484–00	6 – 35

PART NO.	REF. NO.
14B–12485–00	7 – 1
4XV–12485–00	6 – 19
14B–12551–00	7 – 26
14B–12552–00	7 – 48
14B–12576–00	6 – 27
14B–12578–00	7 – 16
14B–12579–00	7 – 12
4C8–12579–00	7 – 8
14B–12588–00	6 – 25
14B–12589–00	7 – 37
14B–12637–00	6 – 33
5SL–12671–00	7 – 25
5GJ–12675–00	7 – 21
14B–12682–00	10 – 37
5FL–12822–00	9 – 15
5VY–13117–10	8 – 5
14B–13161–00	9 – 12
14B–1316E–00	8 – 10
14B–13338–00	6 – 3
14B–13354–00	17 – 26
14B–13355–00	6 – 12
14B–13400–00	9 – 6
14B–13410–00	8 – 2
14B–13414–00	9 – 10
14B–13416–00	8 – 7
5GH–13440–20	9 – 2
14B–13470–00	9 – 14
14B–13473–00	9 – 17
5EB–13475–00	9 – 16
14B–13490–00	9 – 3
8FP–13556–00	10 – 25
	11 – 4
14B–13595–00	10 – 2
14B–13596–00	10 – 4
14B–13750–00	11 – 1
14B–13750–10	11 – 1
14B–13761–00	11 – 2
14B–13761–10	10 – 23
14B–13767–01	10 – 26
2C0–13881–00	10 – 42
14B–13898–00	8 – 15
14B–13907–00	28 – 25
14B–13971–00	11 – 24
14B–13972–00	10 – 34
2C0–14105–00	11 – 14
4KM–14137–00	11 – 16
8A7–14139–00	11 – 13
5PS–14147–00	10 – 24

PART NO.	REF. NO.
5PS–14147–00	11 – 3
895–14169–00	11 – 12
2C0–14216–00	11 – 9
5FL–14216–00	11 – 10
8CC–14216–10	11 – 6
5JW–14348–00	11 – 20
5FL–14348–10	11 – 17
5PW–14349–00	11 – 21
5PW–14396–00	11 – 5
14B–14402–01	10 – 22
14B–1440B–00	10 – 15
14B–14411–01	10 – 6
14B–14412–01	10 – 30
14B–14421–01	10 – 18
14B–14425–00	10 – 9
14B–1443J–00	28 – 71
13S–14445–00	10 – 21
14B–14445–00	10 – 16
14B–14451–00	10 – 33
14B–14452–00	10 – 19
14B–14457–00	10 – 7
14B–14462–00	10 – 8
14B–14467–00	10 – 31
14B–1446R–00	10 – 20
14B–14490–00	10 – 11
14B–14498–00	10 – 17
14B–14602–00	13 – 1
4FM–14613–00	13 – 2
14B–14618–00	13 – 19
14B–14623–00	13 – 17
14B–1465R–00	13 – 28
14B–1465T–00	13 – 38
14B–1465U–00	13 – 21
14B–14710–10	13 – 23
5VY–14714–00	13 – 24
	13 – 34
3D8–14715–00	13 – 26
	13 – 36
14B–14718–00	13 – 52
14B–14720–10	13 – 33
14B–14725–00	13 – 18
14B–14728–00	13 – 55
2D1–14737–00	13 – 14
	36 – 56
3D7–14737–00	13 – 30
	13 – 40
14B–14738–00	13 – 5
14B–14740–00	13 – 4

PART NO.	REF. NO.
5VY–14747–00	13 – 50
14B–1476P–00	13 – 58
14B–1478P–00	13 – 70
14B–1479P–00	13 – 71
5VY–1482K–00	1 – 24
2D1–14840–00	12 – 1
4C8–14881–01	12 – 2
4C8–14882–01	12 – 3
14B–14883–00	12 – 5
5SL–14890–10	1 – 25
14B–14899–00	1 – 26
14B–15100–09	14 – 1
14B–15123–00	14 – 6
14B–15124–00	14 – 7
14B–15133–00	14 – 8
5EB–15155–00	14 – 2
14B–15156–00	14 – 14
14B–15163–00	18 – 10
36Y–15189–00	14 – 24
4H7–15189–00	14 – 26
5PW–15361–00	14 – 21
3F9–15362–10	15 – 11
14B–15377–00	15 – 5
14B–15379–00	15 – 32
14B–15393–00	10 – 13
14B–15411–00	15 – 1
14B–15413–00	15 – 28
14B–15416–00	15 – 17
14B–15418–00	15 – 6
14B–15421–00	15 – 8
14B–15423–01	15 – 31
14B–15431–00	15 – 18
14B–15441–01	14 – 22
14B–15451–00	15 – 2
14B–15456–00	15 – 23
14B–15461–00	15 – 13
14B–15462–00	15 – 29
14B–15484–00	40 – 6
5VY–15499–00	15 – 9
14B–15515–00	16 – 1
14B–15517–00	16 – 3
14B–15521–00	16 – 4
14B–15570–00	16 – 7
14B–16150–00	17 – 1
363–16154–00	17 – 24
4C8–16154–00	17 – 2
14B–16181–00	17 – 25
5VY–16321–00	17 – 7

PART NO.	REF. NO.
4B1–16324–00	17 – 16
4B1–16325–00	17 – 15
	17 – 16
5VY–16325–00	17 – 8
	17 – 15
	17 – 16
14B–16330–00	17 – 6
14B–16340–00	17 – 20
132–16346–00	20 – 2
14B–16351–00	17 – 9
4XV–16356–01	17 – 19
14B–16360–00	17 – 4
14B–16370–00	17 – 5
4C8–16377–00	17 – 17
5VY–16382–10	17 – 29
14B–16384–00	17 – 13
2S3–16539–00	17 – 14
2D1–17121–10	18 – 9
14B–17131–00	18 – 6
4C8–17151–00	18 – 3
14B–17161–00	18 – 8
5VY–17211–00	18 – 31
14B–17221–00	18 – 20
14B–17231–00	18 – 28
14B–17241–00	18 – 25
14B–17251–00	18 – 29
14B–17261–00	18 – 23
14B–17402–00	18 – 16
14B–17411–00	18 – 1
4C8–17460–00	18 – 34
14B–18101–00	20 – 9
14B–18110–00	20 – 17
5JJ–18112–00	20 – 15
5EB–18113–00	20 – 18
5LV–18115–00	20 – 20
5LV–18116–00	20 – 23
1D7–18127–00	20 – 4
14B–18140–00	20 – 12
4XV–18154–00	20 – 19
	20 – 24
2C0–18175–00	20 – 11
14B–18511–00	19 – 5
14B–18512–00	19 – 6
14B–18513–00	19 – 7
14B–18531–00	19 – 8
2C0–18535–00	19 – 9
14B–18536–00	19 – 11
14B–18540–00	19 – 1

PART NO.	REF. NO.
3D7–18542–00	19 – 2
14B–18562–00	19 – 12
14B–2110N–20	21 – 48
14B–21110–00	21 – 1
14B–21110–20	21 – 1
2S3–2111D–00	38 – 74
	38 – 77
14B–2112B–00	21 – 49
4C8–2112D–00	38 – 73
	38 – 76
14B–21131–00	21 – 16
14B–2113C–00	21 – 50
14B–2113D–00	21 – 51
14B–21161–00	28 – 8
14B–21162–00	28 – 13
14B–2116B–00	21 – 24
5VY–2117K–01	29 – 14
4C8–2118K–00	28 – 58
14B–21190–00	21 – 15
14B–21214–00	21 – 19
14B–21414–00	21 – 4
14B–2141R–00	21 – 6
14B–21424–00	21 – 5
14B–21445–00	13 – 9
14B–21446–00	13 – 49
14B–2144G–00	48 – 58
14B–21495–00	21 – 9
	21 – 12
14B–21511–00–P2	22 – 1
2C0–21566–00	24 – 37
13S–21567–00	21 – 41
14B–21578–00	22 – 7
14B–21615–00	21 – 34
14B–21629–00	45 – 4
14B–21639–00	22 – 25
14B–2163A–00	21 – 28
14B–2163E–00	13 – 59
14B–2163F–00	13 – 64
14B–21640–00	21 – 26
14B–21649–00	22 – 26
14B–21650–00	24 – 47
14B–21668–00	24 – 52
14B–21669–00	22 – 17
14B–21682–00	21 – 27
14B–21684–00	10 – 39
14B–21686–00	10 – 40
14B–2171A–00–0X	28 – 36
14B–2172E–00	21 – 55

PART NO.	REF. NO.
14B–2172W–00	7 – 60
14B–21732–00	22 – 23
3NU–21732–00	39 – 51
5PW–21732–00	22 – 22
5VY–21732–00	22 – 21
4C8–21735–00	22 – 20
14B–21737–00	22 – 24
13S–2173M–00	21 – 38
13S–21746–00	21 – 35
4C8–21747–00	23 – 3
5VU–21747–00	28 – 52
14B–2174E–00	21 – 56
4GY–2174X–00	22 – 18
14B–2176P–10	10 – 38
5VY–2176V–00	29 – 15
3XV–21778–00	28 – 43
5PW–2177L–00	38 – 12
	38 – 49
	38 – 64
	39 – 17
	39 – 24
	39 – 37
14B–21781–00	23 – 5
14B–21788–00	23 – 6
14B–21789–00	23 – 7
14B–2178A–00	10 – 41
14B–2179W–10	10 – 38
26H–21828–00	7 – 53
14B–21871–00	7 – 51
14B–21875–00	7 – 52
14B–22110–00–P0	24 – 1
5VY–22128–00	24 – 6
14B–22141–00	24 – 42
14B–22151–00	24 – 13
14B–2217A–00	24 – 23
14B–2217M–00	24 – 26
14B–22184–00	24 – 5
14B–22210–10	25 – 1
14B–22219–00	25 – 10
4C8–22252–00	24 – 45
14B–22253–00	25 – 6
14B–22311–00	24 – 19
14B–22873–00	21 – 36
14B–22874–00	21 – 37
14B–22876–00	21 – 39
14B–22877–00	21 – 40
14B–22879–00	21 – 42
14B–23102–00	27 – 1

PART NO.	REF. NO.
14B–23103–00	27 – 21
14B–23106–00	27 – 3
	27 – 23
14B–23109–00	27 – 10
	27 – 30
14B–23110–00	27 – 2
14B–23111–00	27 – 12
4TX–23115–00	27 – 7
	27 – 27
14B–23118–00	27 – 19
	27 – 39
14B–2311J–00	27 – 32
14B–23120–00	27 – 22
14B–23141–00	27 – 17
	27 – 37
13S–23142–00	27 – 18
	27 – 38
5YU–23143–00	27 – 16
	27 – 36
4TX–23144–01	27 – 4
	27 – 24
5VX–23145–00	27 – 6
	27 – 26
4TX–23156–00	27 – 5
	27 – 25
14B–2315K–00	27 – 8
14B–2315L–00	27 – 28
14B–2318Y–00	27 – 11
	27 – 31
14B–2319M–00	27 – 9
	27 – 29
45B–2331E–00	26 – 21
13S–2332N–00	27 – 15
	27 – 35
14B–23340–00	27 – 41
14B–23377–00	26 – 26
13S–23393–00	27 – 14
	27 – 34
4XV–23415–01	26 – 3
4XV–23418–00	26 – 5
4XV–23434–00	34 – 5
	34 – 12
14B–23435–10	26 – 9
3FV–23462–00	26 – 2
2H9–23469–00	34 – 21
5PW–23472–00	27 – 43
14B–23490–00	26 – 18
14B–23495–00	26 – 16

PART NO.	REF. NO.
14B–23808–00	26 – 27
14B–24106–00	28 – 73
14B–24108–00	28 – 82
5PW–2411J–01	28 – 50
	28 – 51
14B–24121–00	21 – 13
14B–24122–00	21 – 14
14B–24135–00	28 – 27
5SL–2413B–10	28 – 56
14B–2413Y–00	28 – 17
14B–2414E–00	28 – 20
14B–2414G–00	28 – 54
14B–2414H–00	28 – 41
2C0–2414H–00	28 – 74
	28 – 83
14B–2414J–00	28 – 75
	28 – 84
2C0–2414J–00	28 – 77
	28 – 86
4C8–2414J–00	28 – 76
	28 – 85
14B–2414K–00	28 – 53
14B–2414N–00	28 – 48
14B–2414P–00	28 – 49
14B–24161–00	28 – 57
14B–24170–00	28 – 59
5PX–24180–00	28 – 65
14B–24181–00	28 – 44
4FM–24181–00	13 – 32
5VY–24181–00	28 – 6
	28 – 11
4C8–24182–00	28 – 42
5SL–24183–00	28 – 18
5VY–24183–00	28 – 4
4BP–24188–00	28 – 2
14B–24191–00	28 – 5
14B–24192–00	28 – 10
14B–2419F–00	28 – 60
5JW–24311–00	11 – 18
14B–24312–00	28 – 31
	28 – 31
14B–24313–00	28 – 33
14B–24313–10	28 – 33
14B–24314–00	28 – 34
14B–24315–00	28 – 68
14B–24316–00	28 – 69
68V–24376–00	11 – 19
5JW–24486–00	28 – 29

PART NO.	REF. NO.
13S–24491–00	28 – 26
5JJ–24602–00	28 – 22
14B–24710–00	29 – 1
14B–24711–00	29 – 2
5SL–24723–00	29 – 5
13S–24725–00	29 – 10
14B–24725–00	29 – 9
14B–24750–00	29 – 4
14B–24780–00	29 – 6
14B–2478E–00	29 – 12
2C0–24792–00	29 – 7
13S–24847–00	29 – 11
4BR–24877–A0	22 – 29
4XV–25117–00	30 – 2
4XV–25118–00	30 – 12
5VY–25168–00–98	30 – 1
2C0–25181–00	30 – 8
4XV–25186–00	30 – 11
5PW–25188–00	30 – 9
5PW–25317–00	32 – 6
5VY–25338–00–98	32 – 1
2C0–25364–00	32 – 8
5SL–25366–00	32 – 12
5PW–25367–00	32 – 20
5SL–25367–00	32 – 22
5SL–25376–00	32 – 21
5PW–25377–00	32 – 19
4C8–25381–00	32 – 25
4XV–25383–00	32 – 7
5VY–25388–00	32 – 23
5VY–25389–01	32 – 24
5MT–25398–00	30 – 7
	32 – 11
5MT–25398–10	30 – 7
	32 – 11
5MT–25398–20	30 – 7
	32 – 11
14B–25447–20	32 – 15
4C8–2580T–10	31 – 4
4C8–2580U–10	31 – 14
5VY–2580W–12	33 – 3
14B–2581T–00	31 – 1
14B–2581U–00	31 – 2
3YK–25824–00	35 – 5
3YK–25825–00	35 – 6
5SL–25827–00	33 – 17
5SL–25827–10	33 – 18
5SL–25828–01	33 – 19

PART NO.	REF. NO.
4ML–2582A–50	37 – 8
5SL–2582W–00	33 – 1
5SL–25838–00	33 – 7
5VY–2583B–00	31 – 13
	31 – 23
14B–2583V–00	37 – 6
2C0–25852–00	37 – 13
5VY–25852–00	35 – 18
2VN–25854–00	37 – 14
5VY–25854–00	35 – 16
2VN–25855–00	37 – 15
5VY–25855–00	35 – 17
14B–2585H–09	21 – 22
2VN–25866–00	37 – 9
5VS–25867–00	35 – 26
14B–25872–00	35 – 23
14B–25874–00	37 – 28
14B–25875–00	35 – 1
14B–25876–00	35 – 2
14B–2588F–00	37 – 29
14B–25894–00	37 – 12
5SL–25894–20	35 – 15
14B–25895–00	37 – 19
5VY–25895–10	35 – 19
3FV–2589A–00	37 – 11
5VY–2589F–01	35 – 8
5VY–2589G–00	35 – 21
5VY–2589H–00	35 – 22
5SL–25914–00	33 – 9
5DH–25916–00	33 – 14
3JD–25917–00	33 – 11
5SL–25917–00	33 – 6
4C8–25919–00	31 – 9
	31 – 19
5SL–25919–00	33 – 8
2S3–25919–10	31 – 10
	31 – 20
5VY–25921–01	33 – 10
4SV–25924–00	31 – 8
	31 – 18
8CR–25924–00	33 – 13
3GM–25925–00	31 – 11
	31 – 21
5SL–25926–00	33 – 15
5VY–25975–00	35 – 7
14B–26121–00	34 – 1
14B–26122–00	34 – 8
4C8–26240–00	34 – 13

PART NO.	REF. NO.
2C0–26241–00	34 – 6
5PW–26246–00	34 – 3
	34 – 10
14B–26280–00	38 – 82
3LN–26281–01	34 – 17
3LN–26282–01	34 – 18
14B–2628N–00	38 – 85
14B–2628R–00	38 – 86
14B–26290–00	38 – 83
5VY–26292–11	26 – 13
4C8–26298–00	38 – 84
14B–26302–01	34 – 14
2C0–26326–00	37 – 17
5VS–26332–00	35 – 27
14B–26335–01	34 – 7
5VY–26398–00	26 – 24
14B–27211–00	37 – 1
4XV–27222–01	37 – 21
14B–27311–00	36 – 1
14B–27321–00	36 – 2
14B–27351–00	36 – 3
14B–27352–00	36 – 4
13S–27417–00	36 – 49
14B–2741L–00	36 – 33
14B–27424–00	13 – 45
4XV–27424–00	13 – 10
14B–2742L–00	36 – 41
5JJ–27431–00	36 – 32
4C8–27434–00	20 – 25
	37 – 2
5JJ–27437–01	36 – 36
	36 – 44
5JJ–27441–00	36 – 40
14B–27442–00	36 – 13
14B–27443–00	36 – 22
14B–27445–00	36 – 19
14B–27446–00	36 – 29
5JJ–27451–00	36 – 14
5JJ–27461–00	36 – 23
14B–27469–00	36 – 50
14B–27490–00	36 – 52
14B–2749A–00	36 – 53
14B–2749B–00	36 – 54
14B–2749D–00	36 – 55
4C8–27813–00	36 – 28
14B–27911–00	48 – 8
14B–27961–00	48 – 6
14B–28100–00	22 – 30

PART NO.	REF. NO.
4B5–2815K–00	38 – 10
14B–28217–00	21 – 44
14B–28219–00–P3	38 – 13
14B–28227–00	21 – 45
14B–28229–00–P3	38 – 14
14B–28237–00	21 – 46
1TX–28267–00	38 – 31
	38 – 36
14B–28321–00	39 – 48
14B–28322–00	14 – 10
5SL–28338–00	38 – 3
14B–2834C–00	38 – 18
14B–2834E–00	39 – 18
14B–2834X–00	38 – 19
14B–28356–00	38 – 24
14B–2835C–00	38 – 17
14B–2836A–00	39 – 33
14B–2836B–00	26 – 11
4KN–2836B–20	23 – 4
14B–2836C–00	39 – 5
14B–2836E–00	39 – 35
14B–2836F–00	21 – 57
14B–2836G–00	21 – 62
14B–2836H–00	48 – 9
14B–2836J–00	48 – 13
14B–2836K–00	39 – 13
14B–2836L–00	39 – 14
14B–2836T–00	39 – 45
14B–2836U–00	44 – 7
14B–28371–00	39 – 25
14B–28372–00	38 – 28
	38 – 33
3CV–28372–00	22 – 19
14B–2837C–00	39 – 10
14B–2837L–00–P6	38 – 72
14B–2837M–00–P6	38 – 75
14B–28386–00	39 – 2
	39 – 7
	39 – 11
	39 – 19
	39 – 27
	39 – 31
14B–2838B–00	38 – 27
14B–2838B–10	38 – 32
14B–2838J–00	38 – 70
14B–2838N–00–P6	38 – 40
14B–2838P–00	38 – 71
14B–2838R–00–P6	38 – 55

PART NO.	REF. NO.
14B–2838T–00	38 – 41
14B–2838U–00	38 – 56
14B–2838V–00	38 – 45
14B–2838W–00	38 – 60
14B–28394–00	38 – 20
14B–28398–00	38 – 21
14B–28399–00	38 – 22
14B–2839A–00	38 – 23
14B–2839K–00–P6	38 – 44
14B–2839L–00–P6	38 – 59
14B–283A1–00	39 – 21
14B–283A2–00	39 – 29
14B–283A3–00	39 – 22
14B–283A4–00	39 – 30
14B–283B5–00	39 – 4
14B–283B6–00	39 – 9
14B–283BT–00	39 – 44
14B–283BU–00	39 – 58
14B–283BX–00	38 – 2
14B–283C1–00	39 – 43
14B–283C2–00	39 – 56
14B–28425–00	21 – 43
14B–28428–00	38 – 4
14B–28429–00	38 – 5
14B–28435–00	21 – 47
3JJ–28446–A1	22 – 28
14B–2844E–00	38 – 6
14B–2845D–10	38 – 93
14B–2846C–00	38 – 91
14B–2846D–00	38 – 92
14B–2846F–00	38 – 7
14B–2847F–00	38 – 8
4B5–2847F–00	39 – 57
14B–2848F–00	38 – 9
14B–2848M–00	39 – 26
J44–78248–00	38 – 29
	38 – 34
	38 – 50
	38 – 65
4D9–81168–00	47 – 25
	47 – 30
14B–81410–00	40 – 2
14B–81450–00	40 – 1
14B–81670–00	47 – 27
14B–81673–00	47 – 3
4C8–81801–01	41 – 2
8FA–8181L–00	41 – 5
14B–8183G–01	41 – 10

PART NO.	REF. NO.
4C8–81846–00	41 – 4
4C8–81861–00	41 – 8
14B–81890–00	41 – 1
5JW–81940–02	48 – 30
5JJ–81950–20	48 – 28
	48 – 37
5VK–81950–40	48 – 27
5JJ–81952–00	48 – 29
	48 – 38
1D7–81960–00	48 – 24
5VY–82100–00	48 – 18
14B–82116–00	48 – 16
14B–82122–00	22 – 9
14B–8212B–00	22 – 8
14B–8212C–00	22 – 15
5JJ–82131–00	22 – 12
36Y–82151–00	48 – 31
5JJ–82151–00	48 – 22
5JJ–82151–10	48 – 21
5JW–82151–10	48 – 23
5JJ–82151–20	48 – 20
14B–82176–00	22 – 10
14B–82309–00	47 – 16
14B–82310–00	47 – 15
14B–82318–00	10 – 27
2C0–82380–00	11 – 8
	47 – 32
14B–82386–00	11 – 15
14B–82501–40	47 – 12
4BH–82511–09	47 – 13
14B–82530–00	48 – 57
14B–82540–00	47 – 17
13S–82566–50	48 – 3
5VU–82576–01	48 – 33
14B–82590–12	48 – 19
2C0–82910–01	46 – 1
4XV–82917–01	46 – 6
5PW–83310–10	42 – 1
2C0–83318–00	42 – 9
	42 – 18
5PW–83320–10	42 – 5
14B–83330–10	42 – 10
5GJ–83331–00	42 – 2
	42 – 6
5PW–83331–00	42 – 11
	42 – 15
5PW–8333A–10	42 – 3
	42 – 16

PART NO.	REF. NO.
14B–83340–10	42 – 14
5PW–8334A–10	42 – 7
	42 – 12
4MY–83350–01	48 – 26
14B–83371–00	48 – 1
14B–83500–21	43 – 1
4XV–83513–00	38 – 25
5PW–8352S–00	43 – 4
14B–8353E–00	43 – 2
14B–83572–00	43 – 3
14B–83755–00	47 – 24
5EB–83912–03	46 – 2
5JJ–83913–00	46 – 9
14B–83922–00	35 – 10
2C0–83945–00	46 – 3
14B–83963–00	46 – 12
14B–83973–10	46 – 10
4HM–83980–00	35 – 11
14B–84303–01	44 – 2
14B–84312–00	44 – 6
5PS–84314–00	44 – 3
5DM–84347–00	44 – 5
14B–84359–10	44 – 11
14B–84396–00	44 – 4
14B–84516–00	45 – 3
14B–84710–10	45 – 1
4HC–84744–00	45 – 6
5VX–84745–01	45 – 5
14B–84751–00	45 – 15
11H–85110–01	47 – 37
14B–85112–00	47 – 39
14B–85122–00	47 – 40
3Y6–85130–02	45 – 13
449–85131–02	45 – 18
14B–85720–00	47 – 20
8CC–85790–01	47 – 2
14B–85870–00	10 – 10
13S–85884–00	11 – 11
13S–85885–00	11 – 7
8FP–85886–00	47 – 9
5VY–85896–00	47 – 29
14B–8591A–20	47 – 11
14B–8592A–00	13 – 8
5VY–8A8E0–00	47 – 21
2S3–W0041–00	35 – 4
14B–W0042–00	37 – 7
4C8–W0045–00	31 – 7
	31 – 17

PART NO.	REF. NO.
5VX–W0046–00	33 – 12
4C8–W0047–00	31 – 6
	31 – 16
5SL–W0047–00	33 – 5
1J3–W0048–00	31 – 12
	31 – 22
1UY–W0048–00	33 – 16
4C8–W0057–00	31 – 5
	31 – 15
5VY–W0057–00	33 – 4
5VY–W2470–00	29 – 13
14B–W2587–00	35 – 3
14B–Y2161–00–P1	22 – 16
14B–Y2171–10–P0	23 – 1
14B–Y2410–00–03	28 – 1
14B–Y2808–L0–P1	39 – 16
14B–Y2809–L0–P1	39 – 23
14B–Y283G–80–0X	38 – 11
14B–Y283P–40	38 – 1
14B–Y283S–60–P6	39 – 38
14B–Y283U–N0–P2	39 – 1
14B–Y283V–N0–P2	39 – 6
14B–Y28AH–60–P6	39 – 50
90101–08013	24 – 2
90105–06027	1 – 10
90105–06041	35 – 28
90105–06066	6 – 13
90105–06148	48 – 25
90105–06165	14 – 17
90105–06174	39 – 36
90105–06181	14 – 11
90105–06557	26 – 29
90105–07006	5 – 4
90105–08052	38 – 26
90105–08063	13 – 25
	13 – 35
90105–08108	26 – 22
90105–10017	24 – 29
	24 – 35
90105–10018	24 – 33
90105–10020	25 – 8
90105–10150	24 – 40
90105–10290	47 – 7
90105–12062	21 – 2
90105–126A8	40 – 3
90105–14002	30 – 10
90109–06015	21 – 17
	21 – 21

PART NO.	REF. NO.
90109–06016	41 – 12
90109–06100	14 – 16
90109–06248	23 – 10
90109–06264	36 – 57
90109–066F0	1 – 28
	36 – 30
90109–080G5	47 – 14
90109–08174	36 – 18
	36 – 27
90109–085G6	36 – 21
	36 – 31
90109–10002	36 – 12
90110–05028	28 – 30
90110–05030	28 – 28
90110–05047	10 – 12
90110–05063	47 – 19
90110–05112	28 – 23
90110–06106	21 – 25
90110–06156	21 – 33
90110–06161	47 – 26
90110–06163	28 – 21
90110–06167	6 – 17
90110–06168	47 – 28
90110–06169	9 – 5
90110–06173	8 – 6
90110–06175	1 – 27
	26 – 17
	47 – 31
90110–06178	15 – 33
90110–06182	6 – 24
	6 – 41
	7 – 2
	8 – 9
	8 – 16
	9 – 13
	40 – 7
90110–06193	10 – 1
90110–06200	13 – 6
90110–06223	16 – 6
90110–06233	28 – 37
90110–06245	48 – 11
	48 – 15
90110–06256	7 – 15
90110–06258	29 – 3
90110–06296	28 – 16
90110–06315	1 – 18
90110–06323	15 – 15
	15 – 25

PART NO.	REF. NO.
90110–06324	15 – 16
90110–06326	15 – 4
	15 – 30
90110–06331	15 – 24
90110–06338	15 – 7
90110–06340	14 – 23
90110–06343	13 – 20
90110–10005	21 – 7
90110–10023	21 – 10
90111–05002	24 – 51
90111–05026	35 – 29
	37 – 22
90111–05034	38 – 47
	38 – 62
	38 – 78
	38 – 80
	38 – 89
	38 – 90
90111–06003	36 – 20
90111–06019	20 – 28
90111–06030	22 – 5
	36 – 51
90111–06038	37 – 30
90111–06041	26 – 12
90111–06043	22 – 4
90111–06051	21 – 18
	21 – 20
	21 – 61
	21 – 66
	28 – 64
	29 – 8
	39 – 46
	39 – 59
90111–06095	13 – 63
	13 – 68
90111–06119	7 – 62
	48 – 10
90111–06127	13 – 54
	13 – 57
90111–06129	21 – 31
90111–08066	36 – 48
90111–08071	13 – 44
90111–08073	36 – 8
90116–10048	32 – 16
90116–10051	14 – 12
90119–05015	28 – 45
90119–06177	7 – 59
90119–09010	14 – 13

PART NO.	REF. NO.
90149–06022	6 – 42
90149–06043	31 – 3
90149–06070	1 – 11
90149–06071	8 – 14
	15 – 27
	19 – 13
90149–06079	9 – 11
90149–06082	14 – 9
	18 – 15
90149–06128	40 – 5
90149–06152	15 – 10
	15 – 20
90149–06158	16 – 8
90149–06298	24 – 21
90149–06302	22 – 11
	24 – 50
90149–08009	33 – 2
90153–06002	6 – 37
90159–06026	17 – 12
90159–06150	48 – 61
90160–05006	38 – 39
	43 – 5
90160–05007	38 – 37
	44 – 10
90170–06228	20 – 21
90170–28419	26 – 7
90176–06014	7 – 7
90176–06055	38 – 87
90176–10075	1 – 17
90179–05523	21 – 67
	21 – 68
	28 – 46
	38 – 46
	38 – 54
	38 – 61
	38 – 69
90179–08410	13 – 3
90179–10028	21 – 8
	21 – 11
90179–10029	1 – 15
90179–22019	18 – 36
90179–30691	26 – 4
90183–04039	48 – 36
90183–05074	28 – 40
90183–05076	24 – 20
	38 – 16
	47 – 36
90183–050A0	26 – 15

PART NO.	REF. NO.
90183–05M02	38 – 15
90183–06069	48 – 14
90183–060A2	13 – 27
	13 – 37
90185–10009	32 – 17
90185–20008	24 – 43
90185–24007	32 – 26
90201–047A2	48 – 35
90201–05021	41 – 7
90201–06071	7 – 33
90201–06074	7 – 34
90201–06095	28 – 15
90201–06589	16 – 5
90201–08034	13 – 48
90201–08057	24 – 4
90201–08080	13 – 16
90201–08103	20 – 26
	37 – 3
90201–081R9	36 – 7
90201–08676	26 – 23
90201–087G2	13 – 43
90201–08M09	26 – 20
90201–10021	32 – 18
90201–10029	17 – 22
90201–10034	47 – 6
90201–10050	1 – 14
	1 – 16
90201–101J1	36 – 10
90201–12008	40 – 4
90201–12575	20 – 8
90201–12790	47 – 1
90201–127E1	20 – 3
90201–146F9	36 – 11
90201–177G4	20 – 13
90201–20026	24 – 44
90201–22015	18 – 35
90201–25020	32 – 27
90201–257H0	18 – 37
90201–281U8	26 – 8
90201–30016	24 – 46
90201–44008	17 – 33
90202–05180	38 – 48
	38 – 63
	38 – 79
	38 – 81
90202–06004	39 – 3
	39 – 8
	39 – 12

PART NO.	REF. NO.
90202–06004	39 – 20
	39 – 28
	39 – 32
90202–30235	26 – 6
90206–14086	20 – 27
90208–25002	17 – 3
90209–25011	18 – 4
90209–28008	18 – 21
90214–25003	18 – 13
90214–25004	18 – 12
90214–28002	18 – 27
90214–29002	18 – 26
90240–08084	36 – 16
	36 – 25
90269–05001	28 – 67
90269–06001	23 – 9
90269–06008	39 – 15
	39 – 61
	39 – 62
90269–06016	21 – 54
90269–06081	23 – 8
90269–07012	22 – 14
90269–07076	22 – 27
90269–07077	22 – 13
	38 – 51
	38 – 66
	39 – 47
	39 – 60
90282–03005	47 – 5
90338–06018	21 – 60
	21 – 65
	23 – 2
	28 – 78
	28 – 87
	48 – 12
90338–15004	21 – 23
90340–12003	14 – 5
90340–14132	9 – 7
90340–18002	1 – 4
90387–05003	45 – 11
90387–05028	37 – 16
90387–06055	28 – 19
90387–06057	24 – 49
	26 – 14
90387–06066	24 – 16
	24 – 17
90387–06112	6 – 40
	13 – 7

PART NO.	REF. NO.
90387–06143	28 – 9
90387–0614M	7 – 23
	7 – 31
90387–06170	13 – 53
	13 – 56
90387–061Y1	21 – 32
90387–06203	28 – 39
90387–06217	13 – 15
	21 – 58
	21 – 63
90387–062L2	28 – 62
90387–062X0	24 – 15
90387–06372	7 – 61
90387–064T3	38 – 88
90387–065J6	22 – 3
	39 – 55
90387–06681	7 – 58
90387–06697	36 – 39
	36 – 47
90387–06M16	48 – 60
90387–07717	24 – 22
90387–08005	13 – 11
90387–08020	13 – 46
90387–08021	13 – 51
90387–087L0	13 – 62
	13 – 67
90387–10034	24 – 39
90387–1012A	24 – 31
	24 – 38
90387–1013U	24 – 32
90387–11006	47 – 4
90387–22023	24 – 12
90387–25008	18 – 30
90387–25023	18 – 7
90387–28003	18 – 2
90387–28004	18 – 24
90387–30012	18 – 18
90387–31003	18 – 19
90401–10012	31 – 24
90401–10172	35 – 24
	37 – 26
90401–20145	9 – 1
90413–06031	11 – 23
90413–07023	7 – 44
90430–06014	1 – 12
	6 – 36
90430–08143	15 – 21
90430–10005	35 – 25

PART NO.	REF. NO.
90430–10005	37 – 27
90445–08028	47 – 33
90445–08036	7 – 54
90445–107A5	48 – 52
90445–11418	28 – 70
90445–19002	36 – 6
90446–15386	37 – 5
90450–22017	7 – 38
90450–35001	6 – 29
	7 – 9
	7 – 17
	7 – 27
90450–38040	6 – 28
	7 – 11
	7 – 13
	7 – 29
90450–45001	13 – 22
	13 – 29
	13 – 39
90450–60004	10 – 3
	10 – 5
90461–15139	28 – 66
90464–06214	34 – 19
90464–09M31	28 – 32
90464–12009	48 – 49
90464–12089	48 – 56
90464–13073	48 – 39
	48 – 40
	48 – 45
	48 – 46
90464–13077	48 – 44
	48 – 47
	48 – 48
90464–14228	21 – 30
90464–15195	44 – 12
90464–16001	48 – 50
90464–16005	11 – 25
90464–16006	13 – 69
90464–16061	10 – 28
	48 – 42
	48 – 43
	48 – 54
90464–21256	48 – 53
90464–28003	12 – 9
90464–36004	48 – 51
90464–47002	44 – 8
90464–59001	35 – 30
	48 – 55

PART NO.	REF. NO.
90465–08053	47 – 23
90465–13M11	48 – 41
90467–08003	7 – 55
90467–08021	47 – 34
90467–08075	7 – 63
90467–09006	11 – 22
	28 – 35
	28 – 72
90467–10M04	7 – 56
90467–11044	7 – 47
	7 – 50
90467–11090	7 – 41
	7 – 43
	7 – 46
	7 – 49
90467–12085	37 – 18
90467–120A3	35 – 20
90467–160A2	10 – 14
	10 – 36
90467–17003	12 – 8
90467–180A0	12 – 7
90467–18172	12 – 4
	12 – 6
90467–200A0	6 – 26
	7 – 39
90480–01558	13 – 60
	13 – 65
90480–08005	38 – 43
	38 – 58
	47 – 8
90480–08006	39 – 41
	39 – 53
90480–10542	28 – 7
	28 – 12
90480–11009	45 – 12
90480–12005	24 – 48
90480–12010	6 – 39
90480–12023	28 – 38
90480–12072	22 – 2
90480–12579	13 – 13
90480–12581	13 – 61
	13 – 66
90480–12596	39 – 42
	39 – 54
90480–12607	48 – 59
90480–13010	8 – 4
90480–13018	28 – 61
90480–13567	38 – 94

PART NO.	REF. NO.
90480–15363	7 – 22
90501–06022	19 – 3
90501–080A2	19 – 10
90501–12743	36 – 34
	36 – 42
90501–240A2	17 – 11
90506–18008	36 – 5
90506–18021	20 – 1
90506–18022	37 – 4
90508–16041	17 – 21
90508–18134	36 – 15
90508–18135	36 – 24
90508–32020	20 – 10
90520–01001	38 – 52
	38 – 67
90520–03001	38 – 30
	38 – 35
90520–03005	38 – 53
	38 – 68
90520–05002	28 – 55
90520–05011	39 – 39
90520–10005	28 – 80
	28 – 89
90520–15001	21 – 52
90520–15004	21 – 53
90560–05N33	28 – 79
	28 – 88
90560–06244	26 – 28
90560–08251	21 – 59
	21 – 64
	39 – 40
	39 – 52
91312–04025	48 – 34
91312–05010	28 – 24
91312–05020	47 – 35
91312–06012	48 – 17
91312–06016	28 – 3
91312–06025	5 – 8
	34 – 20
91312–06045	6 – 11
91314–06012	6 – 34
91314–06035	36 – 37
	36 – 45
91314–08030	26 – 10
	27 – 42
	34 – 2
	34 – 9
91314–08035	27 – 20

PART NO.	REF. NO.
91314–08035	27 – 40
91317–05012	44 – 1
91317–05020	34 – 15
91317–05025	34 – 16
91317–06025	34 – 4
	34 – 11
91317–06030	7 – 32
91401–25015	36 – 17
	36 – 26
91402–16012	37 – 25
91702–06018	37 – 23
91808–16023	1 – 5
	1 – 6
	1 – 7
	1 – 8
	1 – 9
91808–30031	6 – 16
92012–05014	10 – 29
92012–06010	13 – 31
	13 – 41
92012–06016	24 – 14
	24 – 18
	28 – 63
92014–08016	15 – 22
92014–08035	13 – 12
92017–05016	48 – 7
92017–05025	48 – 4
92902–04100	35 – 13
92902–04600	35 – 14
92902–06200	37 – 24
92902–06600	45 – 16
92907–05200	45 – 10
92907–08600	17 – 31
93101–18061	25 – 5
93102–12106	20 – 6
93102–15212	17 – 27
93102–40330	18 – 32
93106–28004	24 – 11
93106–28043	30 – 4
93106–40013	32 – 3
	32 – 14
93109–17071	24 – 25
	24 – 28
	25 – 3
93210–04092	14 – 3
93210–06001	41 – 9
93210–06667	6 – 20
	8 – 13

PART NO.	REF. NO.
93210–09525	8 – 12
93210–12010	8 – 11
93210–14003	8 – 8
93210–15566	9 – 4
93210–15620	37 – 10
93210–16325	14 – 25
93210–21001	47 – 18
93210–22001	14 – 27
93210–22M93	8 – 3
93210–235A1	6 – 22
	6 – 38
	7 – 3
93210–25711	41 – 3
93210–27370	6 – 23
93210–27778	15 – 12
93210–357A2	6 – 18
93210–41N50	27 – 13
	27 – 33
93210–46044	6 – 31
93210–49046	7 – 6
93210–68001	15 – 19
93305–20605	18 – 17
93306–00106	6 – 2
93306–00304	17 – 10
93306–07208	30 – 3
93306–20531	32 – 2
	32 – 13
93306–205A2	18 – 38
93306–20652	18 – 11
93306–27208	18 – 14
93306–80501	19 – 4
93306–97202	24 – 9
93310–23168	17 – 18
93310–24160	16 – 2
93315–21570	17 – 28
93315–31758	24 – 24
	24 – 27
	25 – 2
93317–11096	17 – 30
93317–11295	20 – 5
93317–428U8	24 – 8
93317–43580	32 – 4
93317–52897	24 – 7
93399–99932	26 – 1
93399–99957	26 – 25
93399–999T4	25 – 4
93420–61M07	32 – 5
93440–28184	18 – 5

PART NO.	REF. NO.
93440–30113	25 – 7
93440–31187	18 – 22
93440–52009	18 – 39
93440–62032	18 – 33
93450–18157	3 – 10
93501–04011	36 – 35
	36 – 43
93603–12007	6 – 10
93603–17070	6 – 9
93607–44002	5 – 11
93610–20189	15 – 14
93900–00030	30 – 6
	32 – 10
94112–17104	30 – 5
94119–17067	32 – 9
94580–31082	8 – 1
94582–30120	32 – 28
94591–60126	5 – 5
94682–30031	32 – 29
94701–00424	1 – 19
95022–06008	48 – 32
95022–06016	47 – 22
95022–06020	6 – 15
	20 – 16
95022–06025	6 – 8
95022–06030	28 – 14
95024–06025	6 – 32
95027–06020	46 – 5
95302–06700	41 – 6
	41 – 11
95302–08600	24 – 3
95304–06700	20 – 22
95307–08700	37 – 20
95602–05100	45 – 9
95602–08200	26 – 19
95602–10200	24 – 30
	24 – 34
	24 – 36
	24 – 41
	25 – 9
95602–16200	25 – 11
95604–06200	36 – 38
	36 – 46
95607–05200	45 – 14
	48 – 5
95607–06100	45 – 17
95607–06200	7 – 36
	46 – 4

PART NO.	REF. NO.
95607–10200	36 – 9
95612–08625	1 – 13
95617–06100	35 – 9
95702–06500	22 – 6
95707–05500	45 – 19
	47 – 38
95802–06012	39 – 49
95802–06016	39 – 34
95807–06012	48 – 2
95812–06040	14 – 20
95812–06050	14 – 19
95812–06060	14 – 18
95812–08040	13 – 42
95812–08060	14 – 15
95814–08045	13 – 47
95817–12080	21 – 3
95827–06030	7 – 35
97702–50012	38 – 42
	38 – 57
97702–50014	45 – 2
97702–50016	21 – 29
	44 – 9
	47 – 10
97706–04012	42 – 4
	42 – 8
	45 – 7
97707–04012	42 – 13
	42 – 17
97707–50012	38 – 38
98502–04012	35 – 12
98507–04010	46 – 8
98507–05025	46 – 11
98507–05045	46 – 13
98707–03016	46 – 7
98902–05008	28 – 81
	28 – 90
98902–05014	10 – 32
	28 – 47
98902–05020	10 – 35
	45 – 8
99001–07600	17 – 32
99002–10600	20 – 7
99009–10400	17 – 23
99009–12400	6 – 14
99009–17400	20 – 14
99009–42500	24 – 10
99530–08012	9 – 9
	15 – 3
99530–10014	14 – 4
99530–10114	1 – 30
	2 – 3